NASA SBIR/STTR Technologies

S1.02: Reconfigurable, Wideband Radar Transceiver and Antenna for P-band Stretch Processing

Intelligent Automation Inc.– Rockville, MD

PI: Arvind Bhat

Proposal No.: 09-1 S1.02-8751

Identification and Significance of Innovation

IAI proposes to develop a Reconfigurable Wideband Radar Transceiver, with direct digital synthesis of P-band radar frequencies, novel high bandwidth P-band antenna design with high contrast ceramic material and digital implementation of receiver stretch processing, to achieve the solicitation objectives. Our innovation focuses on implementing maximum radar transceiver functionalities on high-speed digital reconfigurable platforms (FPGAs), and minimizing the number of analog components. Our Software-Defined Radar designs are based on COTS components and are modular in nature. This makes it easier to upgrade smaller units of the design with development in state-of-the-art, instead of re-designing the entire SDR. The stringent payload constraints of Unmanned Aerial Systems (UAS) require tight integration of all radar functionalities, including signal generation, acquisition, processing, and down-link. The proposed platform can be an enabler for low form factor radar systems to support on-going UAS based NASA missions for Biomass/ecosystems imaging in P-band. A summary of our proposed innovation are:

- Reconfigurable digital waveform synthesizer with 600 MHz bandwidth capability.
- Compact P-band antenna design using high-contrast ceramic materials to cover 200 MHz bandwidth.
- Digital implementation of receiver stretch processing.
- Low size, weight and power specifications making the radar design suitable for UAS applications.

Estimated TRL (1 – 9) at beginning and end of contract: 5-6

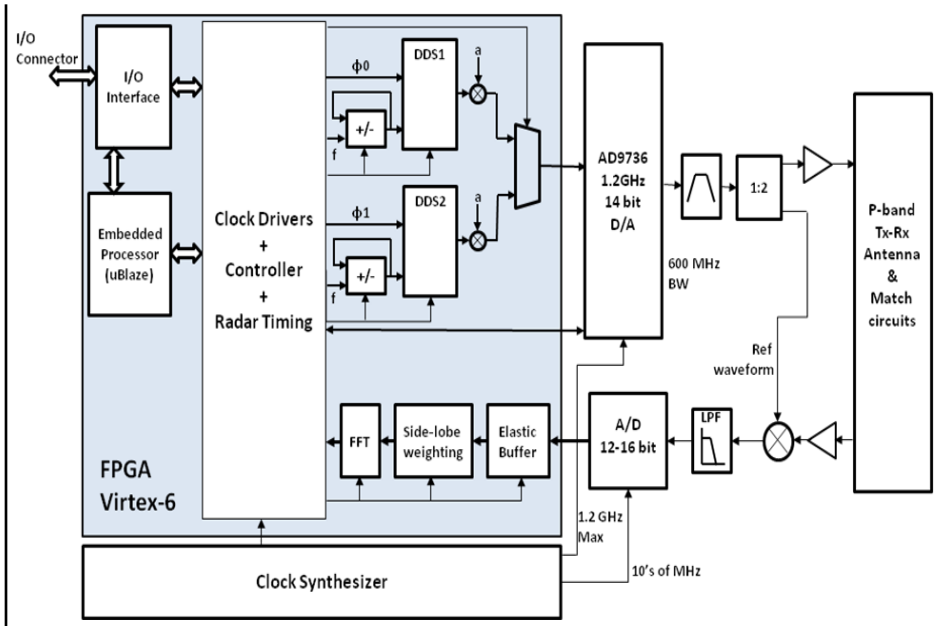

Technical Objectives and Work Plan

The overall objective of the Phase-I SBIR will be to demonstrate the feasibility of designing a direct digital P-band radar transmitter, integration with custom-designed high bandwidth P-band antennas and stretch processing implementation at the receiver. During the Phase I effort, we have five main objectives as described below:

Objective 1: Develop a direct digital P-band waveform synthesizer.
Objective 2: Design and optimization of high bandwidth P-band antenna with due consideration for matching network design with digital transceiver.
Objective 3: Stretch processor prototype implementation for wideband P-band signal processing.
Objective 4: Prototype system integration and laboratory based testing with sample targets
Objective 5: Justify that the SWAP parameters for a miniaturized design of radar prototype meets NASA requirements for UAS missions.

NASA and Non-NASA Applications

Our proposed technique can be used for a wide range of remote sensing applications for NASA including:

- Airborne SAR applications
- Miniaturized, reconfigurable radar systems for UAS
- Weather surveillance radar for aircrafts
- Earth science measurements like Biomass/ecosystems, surface deformation, topography and soil moisture measurements

The most promising commercial applications outside of NASA are:

- Arbitrary wideband waveform synthesizer
- High-speed digital processors
- Reconfigurable radar transceiver with multi-mode capabilities

Firm Contacts

Arvind Bhat
abhat@i-a-i.com, (301)-294-5254

NON-PROPRIETARY DATA