NASA SBIR/STTR Technologies

NNX10RA22C – Long Duration Space Shelter Shielding

PI: John Steinbeck
Physical Sciences Inc. – Andover, MA

Identification and Significance of Innovation

PSI's fiber re-enforced boron carbide composites:

- Provide > 20% greater shielding effectiveness than aluminum against GCR and SPE with 10% reduced weight
- Enable 90 day lunar missions with astronaut radiation exposure less than 150 mSv
- Enable on site/in flight construction of large complex structures
- Multifunctional wall system can be used for storage and habitat thermal management.

Expected TRL Range at the end of Contract (1-9): 5

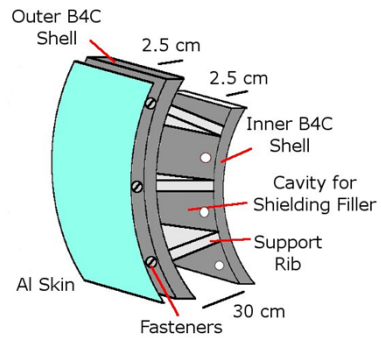

Design

Prototype

Technical Objectives and Work Plan

- Fabricate ceramic and polymer boron carbide composite materials
- Demonstrate that the materials have high (> 150 MPa) strength
- Demonstrate that the properties of the materials do not degrade in a space radiation environment
- Develop a model for a multifunctional shelter wall
- Build a prototype multifunctional wall segment using fiber reinforced boron carbide composites.

NASA and Non-NASA Applications

- Lunar and Martian habitats for long duration missions
- Interplanetary vehicles for human transport
- Light weight radiation shielding for medical and science experiment applications
- Light weight nuclear waste containers.

Firm Contacts

Dr. John Steinbeck, Physical Sciences Inc.
(978) 738-8148
steinbeck@psicorp.com

NON-PROPRIETARY DATA