NASA SBIR/STTR Technologies

HPC Benchmark Suite NMx

PI: Sendil Rangaswamy, Intelligent Automation, Inc. Rockville, MD 20855
STTR Partner: University of Central Florida, Orlando

Identification and Significance of Innovation

In the phase II effort, Intelligent Automation Inc., (IAI) and University of Central Florida (UCF) propose to develop a comprehensive numerical test suite for benchmarking current and future high performance computing activities. The developed HPC benchmark suite (HPC Benchmark suite NMx) packages will be for current and future large models and will include:

•dense and unsymmetrical matrix problems faced in space aviation and problems in thermally driven structural response and radiation exchange
•implicit solution algorithms with production models and benchmarks for indefinite matrices and pathological cases
•configurations scaling for large systems (64, 256, 512, 1024 distributed high performance system) in shared, distributed and mixed memory conditions
•documentation for strengths, weaknesses, and limitations of the toolkits used together with recommendations
•precision and round-off studies on serial and parallel machines, comparison of solutions on serial and parallel hardware with study of wall clock performance

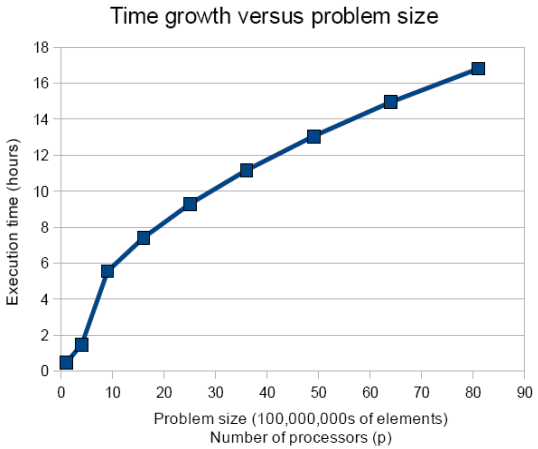

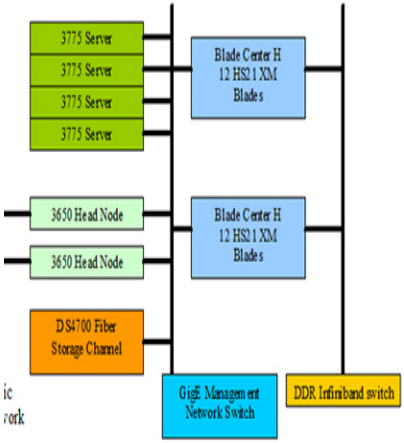

Fig: Scaled performance Benchmark test on STOKES using PZGESV ScaLAPACK run time solvers of dense matrices from phase I result and its hardware configuration is shown in the right

Expected TRL Range at the end of PhaseII (1-9): : **6**

Technical Objectives and Work Plan

Objective 1: Selection of additional models to that of phase I with analytical solutions with indefinite matrices and large dense matrix conditions.

Objective 2: Selection of problems with precision and round-off studies on serial and parallel machines

Objective 3:Selection of additional implicit solution algorithms to that of phase I with production models in the area of thermal and structural analysis

Objective 4: Test implementation and demonstration of the problem set on selected cluster architectures and study wall clock performance with respect to the number of processors. Comparison of solutions on serial and parallel hardware in different shared, distributed memory and hybrid mixed memory architecture Analyze and document the strengths, weaknesses, and limitations of the toolkits used together with recommendations

Objective 5:Test the benchmark suite with NASA. Modify and package the benchmark suite for commercialization

NASA and Non-NASA Applications

NASA
Benchmark HPC for
•temperature contour of space shuttle,
•boundary layer Transition protuberance

•heat shield problems computations

Non-NASA
Benchmark HPCs for
• heat transfer problems in structures in avionics, diagnostic of structures in space exploration and exploration of structure formation and problems in geology
•thermal and structural problems in industry, manufacturing sectors and military.
•Other applications include diagnostics and health monitoring applications.
•Weather, nuclear simulations etc

Firm Contacts

Sendil Rangaswamy
sendilr@i-a-i.com,Tel: 301-294-4756

NON-PROPRIETARY DATA