NASA SBIR/STTR Technologies

Long Duration Space Shelter Shielding Composites

PI: John W. Steinbeck / Physical Sciences Inc. – Andover, MA

Proposal No.: 07-2 X6.03-8797

Identification and Significance of Innovation

Long duration manned space missions require effective radiation shielding structures. Carbon fiber reinforced boron carbide composites will be 20% more mass efficient radiation shields compared to aluminum.

Phase I used HZETRN calculations and radiation exposure experiments to show the superior shielding performance of boron carbide composites compared to aluminum

Expected TRL Range at the end of Contract: **5**

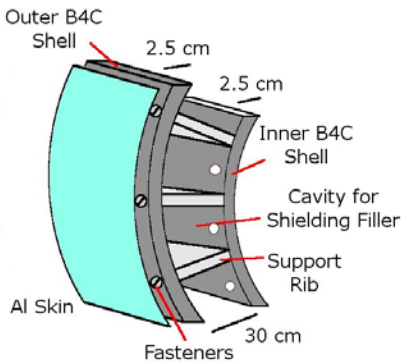

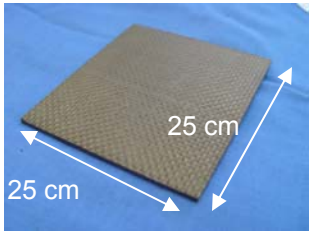

Technical Objectives and Work Plan

Objectives:

- Demonstrate reliable B_4C composite fabrication process
- Demonstrate radiation resistance to GCR and SPE
- Develop joining procedures
- Model B_4C wall shielding effectiveness
- Build prototype wall segment

Work Plan:

- Fabricate and characterize B_4C composite materials
- Perform radiation resistance measurements at NSRL
- Develop composite joining procedures
- Use OLTARIS to model B_4C composite shelter performance
- Construct prototype

NASA and Non-NASA Applications

NASA applications:

- Radiation shielding for detectors
- Lunar/Martian habitats

Non-NASA applications:

- Nuclear waste transport containers
- Medical facility shielding

Firm Contacts

Dr. John Steinbeck
Physical Sciences Inc.
(978) 738-8148
steinbeck@psicorp.com

NON-PROPRIETARY DATA