NASA SBIR/STTR Technologies

Proposal No. 08-2 A3.01-8875 NextGen Airspace - ACES-based Testbed and Bayesian Game-theoretic Framework for Dynamic Airspace Configuration

PI: Goutam Satapathy

Intelligent Automation- Rockville, MD

Identification and Significance of Innovation

The proposed research effort directly supports NASA Airspace Project and JPDO initiatives in DAC. This SBIR effort will result in the development of an operational concept and modeling and simulation capability that will enable the evaluation of technologies related to DAC. Some examples of expected operational improvements include:

- Reduction in congestion and delays when sector capacities violates MAP or DD metrics
- Reduction in controller workload and improved safety
- Ability to accommodate user preferred routes
- Achieve a balance between airborne delay and grounding holding delay

The key innovation in the proposed Phase II research is the development of a DAC-TFM framework and an inter-ARTCC coordinated DAC-TFM algorithm (based on extending our Phase I combined DAC-TFM algorithm) that addresses workload balancing and delay optimization in the context of NextGen traffic demand and dynamic user preferred routes.

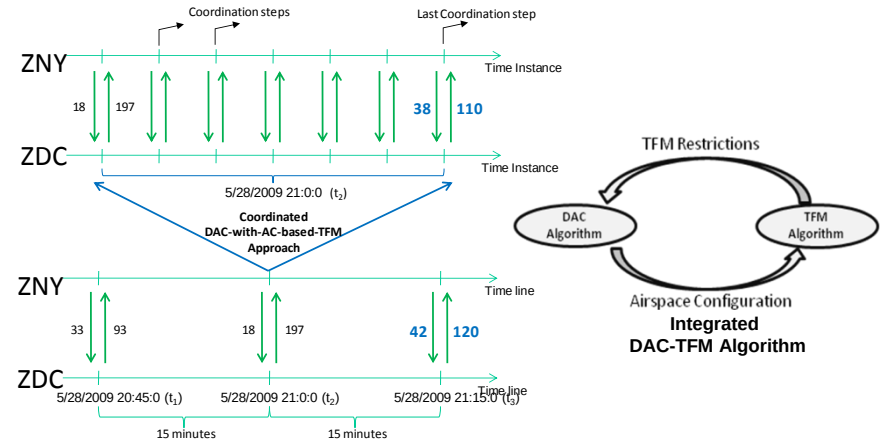

Expected TRL Range at the end of Contract (1-9): TRL 5

Technical Objectives and Work Plan

Objective 1: Design and develop an airspace configuration based TFM model that uses the airspace configuration to determine the TFM delays

Objective 2: Design and Implement a combined DAC-TFM algorithm that can be plugged into ACES simulation.

Objective 3: Demonstrate and validate the core objective of DAC-TFM concept, i.e., balancing workload, balancing airborne & ground delays, and reducing delays, on ACES using NextGen traffic and airspace configuration.

Objective 4: Design and implement a coordination framework where TFM delay restrictions decided to be propagated upstream are computed based on iterative search between ARTCCs

Task 1: DAC Algorithm Analysis and Data Collection
Task 2: Develop Airspace Configuration (AC) based TFM Model in ACES
Task 3: Use AC-based TFM model into existing Airspace Partitioning based DAC algorithms
Task 4: Improve DAC with AC-based TFM prototype developed in Phase I
Task 5: Develop a Framework for study of DAC-TFM algorithms in ACES
Task 6: Perform DAC-TFM Analysis and Improvement
Task 7: Develop Inter-ARTCC Coordination based DAC-TFM framework in ACES
Task 8: Enhance TAASE with sector and trajectory visualization capability
Task 9: Determine DAC-TFM Trigger Conditions
Task 10: Commercialization and Phase III transition
Task 11: Reports and Deliverables

NASA and Non-NASA Applications

We anticipate the post applications for this technology to be initially tied very closely to NASA's Airspace DAC research efforts. We anticipate that the algorithms and framework developed in this effort will be further enhanced and integrated into ACES main branch under ongoing ACES effort in the 2012 -2014 timeframe. This research will complement ongoing NASA research in DAC and will support the following NASA DAC milestones

- Validate by simulation that airspace could be reconfigured every x hours without adverse effects (AS.3.3.04, due FY09)
- Candidate airspace allocation algorithms proposed (AS.2.3.01,)
- Candidate airspace allocation algorithms validated (AS.2.3.02,)
- DAC concepts experimentally validated (AS.4.3.01)

In addition to Airspace DAC research, the ACES products will also significantly benefit from the enhancements made to ACES software. ACES is currently actively used by NASA contractors and researches. IAI has been involved in NASA's ACES development since its inception in 2001. IAI is thoroughly familiar with the ACES software and actively supports it for NASA's researchers and analysts.

Firm Contacts

PI: Goutam Satapathy, goutam@i-a-i.com
CO: Mark James, mjames@i-a-i.com
15400 Calhoun Drive, Suite 400, Rockville MD 20855

NON-PROPRIETARY DATA