NASA SBIR/STTR Technologies

Differential Diode Laser Sensor for High-Purity Oxygen

PI: Thomas Jenkins – MetroLaser, Inc. Irvine, CA

Proposal No: 10-T6.02-9943

Identification and Significance of Innovation

Portable robust sensors are needed for O_2 between 99.0 and 99.7 % purity for on-orbit and other remote applications. MetroLaser will team with Stanford University to develop a dual cell approach that relies on differential absorbance to enable 0.05 % sensitivity.

Expected TRL Range at the end of Contract (1-9): 3

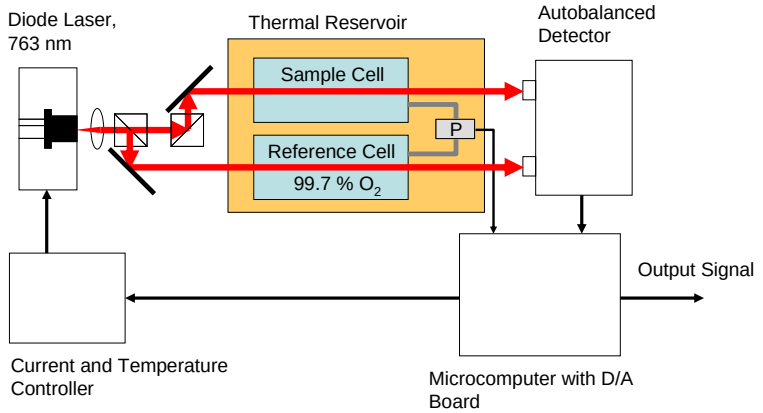

Technical Objectives and Work Plan

1. Determine effects of impurities on O_2 lineshape
2. Define parameters causing greatest errors
3. How much interference from fringe effects?
4. Determine L for a 0.05 % resolution in O_2
5. How much drift over several weeks or longer?
6. Demonstrate linearity over 99.0 to 99.7 % O_2
7. Assess feasibility requirements

NASA and Non-NASA Applications

NASA: On-orbit monitoring of oxygen tanks for degradation, monitoring of oxygen for wastewater aeration, and monitoring for leaks in oxygen storage systems.

Non-NASA: Gas suppliers for verifying purity in remote locations, governmental research, industrial cutting and welding, and municipal wastewater treatment.

Firm Contacts

Dr. Thomas Jenkins, PI – MetroLaser, Inc. (949) 553-0688 ext. 269
Dr. Cecil Hess, President – MetroLaser, Inc. (949) 553-0688
Ms. Christina Arnold, Director of Contracts – MetroLaser (949) 553-0688

NON-PROPRIETARY DATA