WATER PROPERTIES SENSOR (WPS)

Part 1 Table of Contents **PAGE**

Cover
Project Summary
Part 1 Table of Contents 3
Part 2 Identification and Significance of the Innovation 3
Part 3 Technical Objectives 4
Part 4 Work Plan 4
4.1 Technical Approach 4
4.2 Task Descriptions 5
4.2.1 Spectral Irradiance Sensor 5
4.2.2 Spectral Radiance Sensor 12
4.3.3 Spectral Absorption Sensor 15
4.2.4 Spectral Bean Attenuation Sensor 22
4.2.5 Spectral Fluorescence Sensor 32
4.2.6 Physical Properties Sensor Selections 38
4.2.7 System Adaptors 41
4.2.8 Accessories 42
4.3 Meeting The Technical Objectives 45
4.4 Task Labor Categories and Schedules 45
Part 5 Potential Applications 46
5.1 Potential NASA Applications 46
5.2 Potential Non-NASA Commercial Applications 46
Part 6 Contacts 47
6.1 Key Contractor Participants 47
6.2 Key NASA Participants 47
6.3 NASA and Non-NASA Advisors 47
Part 7 Technical Activities 48
7.1 Cumulative Technical Activities 48
7.2 Future Technical Activities 48
Part 8 Potential Customer and Commercialization Activities 48
8.1 Cumulative NASA Potential Customer Activities 48
8.2 Cumulative Non-NASA Potential Customer Activities 48
8.3 Other Cumulative Commercialization Activities 48
8.4 Future Potential Customer and Commercialization Activities 48
Part 9 Resources Status 48
Part10 References 49

PART 2 IDENTIFICATION AND SIGNIFICANCE OF THE INNOVATION

Identification

This final report presents the details for the design of a Water Properties Sensor (WPS) system. It is focused on eight Phase I Work Task Areas provided under Section 4.2. The eight areas are:

Spectral Irradiance Sensor
Spectral Radiance Sensor
Spectral Absorption Sensor
Spectral Bean Attenuation Sensor
Spectral Fluorescence Sensor

Use or disclosure of sensitive information contained on this page is subject to the restriction on the title page of this proposal or document.

Physical Properties Sensor Selections
System Adaptors
Accessories

Each area first presents the preferred design for the topic. It is followed discussion of early work completed or of alternate designs, which provide the historical considerations for the evolution that developed the preferred design.

Significance of the Innovation
In this project we have achieved the SBIR Phase I programs specific objectives *to stimulate U.S. technological innovation* and place *emphasis on pursuing commercial applications*.

In Addition, we have achieved new and innovative solutions for measuring the properties of water (See subsection 4.2). And we have a technical approach, for building in a Phase II project, a miniature man-portable Marine Observatory that will allow oceanographers, from a small boat, to simultaneously and easily collect the full visible band spectral inherent and apparent optical properties (IOP & AOP) along with the physical properties of oceanic, coastal, and fresh water.

Our Water Properties Sensor (WPS) designs are configured to support NASA's Ocean Biology and Biogeochemistry and Applied Sciences programs, the Integrated Ocean Observing System (IOOS), field studies of fundamental marine processes, regional coastal research, and the gathering of in situ water measurements of the environmental conditions fundamental to the measurement, calibration, and validation of NASA's satellite programs. The anticipated results of this R/R&D effort, is that a proven fully functional, integrated, rugged, small, and low cost oceanographic measuring system will be available for the first time for marine studies.

PART 3 TECHNICAL OBJECTIVES
The technical objectives of this Phase I project were to determine the technical feasibility, scientific, and commercial merit of Kaitech's proposed innovative and unique WPS system. During the project we achieved these objectives and believe that our design concepts for the WPS system meet NASA's SBIR 2009 Subtopic S1.08 "In Situ Airborne, Surface, and Submersible Instruments for Earth Science" in-water operational requirements to measure the full visible band spectral inherent and apparent optical properties (IOPs & AOPs) simultaneously with the physical O^2, pH, temperature, salinity, and depth properties to provide oceanographers with a comprehensive set of measurement capabilities for determining the water's radiological and biological components (such as phytoplankton and harmful algal blooms) while minimizing operational labor requirements and improving system reliability. In addition, Kaitech's internal technical objectives were to develop a maritime compatible system that was miniaturized, man-portable, singly deployable, affordable, stable, fouling resistant, and easy to operate.

PART 4 WORK PLAN
4.1 Technical Approach
The Work Plans technical approach was to conceptualize, synthesize, and actualize the designs for the WPS system. The work areas addressed were as follows:

1. Design five miniature hyperspectral inherent and apparent optical properties (IOPs & AOPs) measuring sensor instruments
2. Select six commercially available physical property measuring sensor instruments
3. Design a small multiple instrument mounting structural adaptor to hold the new optical and physical property instruments

Use or disclosure of sensitive information contained on this page is subject to the restriction on the title page of this proposal or document.

4. Integrate all of the designed and selected instruments into a singly deployable Water Properties Sensor (WPS) instrument to measure the geospatial information of the in situ oceanic, coastal, and fresh water's fundamental marine processes

For each work area a design was generated and submitted to experienced oceanographers to gather their recommendations.

4.2 Task Descriptions

4.2.1 SPECTRAL IRRADIANCE SENSOR

DESIGN

The Spectral Irradiance Sensor started life in Kaitech's design laboratory as an already miniature instrument appended with optical fiber conductors that swept through the surrounding space with a high likelihood of snagging any obstruction encountered. We provide some of its pertinent analysis in a section entitled Early Work. As the design evolved we looked at alternative optics and at a chance meeting sculptured optical tips for the optical fibers were suggested. Investigations into various tip design ideas revealed significant potential miniaturization benefits leading to the current Spectral Irradiance Sensor Designs being offered in this report.

The Spectral Irradiance Sensor comes in two versions. The first version, (see the figure) uses an optical diffuser, a half sphere ball lens, and an optical fiber connected to a spectrometer to measure the 180° hemispherical spectral radiant flux incident per unit area on a flat plane surface. This design is innovative in that the optical fiber is positioned parallel to the sensing surface allowing the miniaturization of the sensor and its placement at the end of cantilevered arms to preclude optical shadowing.

.

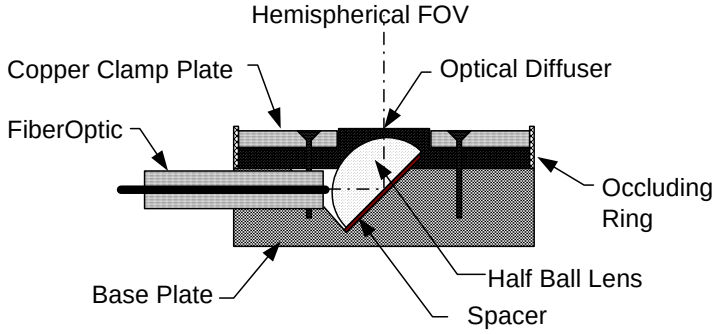

.

The second version, (see the next figure) is similar but places a full ball lens into the end face of a Spectral Irradiance Sensor Module to view zenith or nadir from mounted positions on the WPS Systems Electronics Housing.

Use or disclosure of sensitive information contained on this page is subject to the restriction on the title page of this proposal or document.

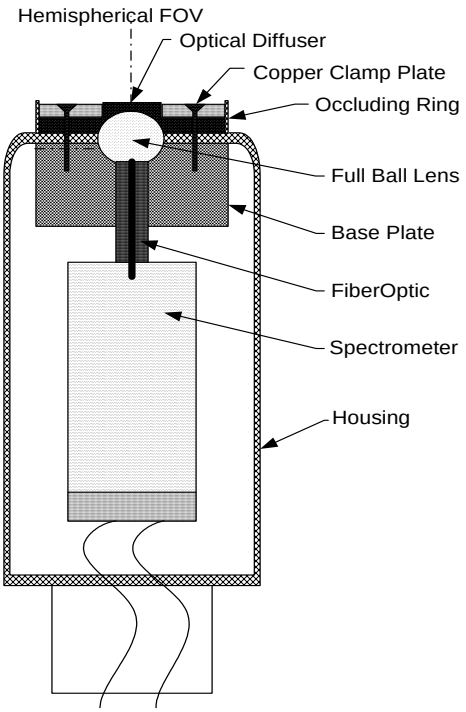

DIFFUSER ATTACHMENT

For mounting of the PTFE Teflon and securing its contact with the ball lens we initially planned using adhesives, but as the side looking sensor design matured, securing the diffuser to the lens was redesigned to mechanically trap the PTFE Teflon material within the confines between the ball lens and the sensors cover plate. We achieve this by tapering the PTFE Teflon material top side and shaping the under side to fit the ball lens to press the diffuser to the lens.

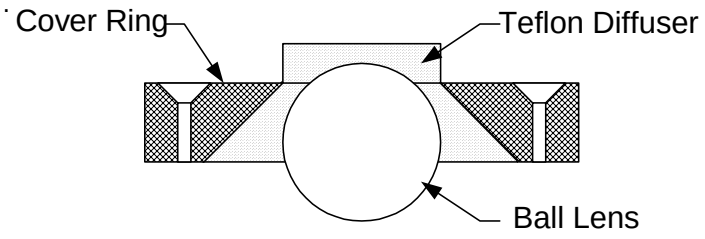

The Diffuser is Tapered and Mechanically Clamped

OPTICAL DESIGN

Placing a 1 mm Fiber Optic at 11 mm separation from an 8 mm diameter BK7 Ball Lens produces a 140 degree FOV into a Teflon diffuser. The diffuser completes the design to coincide to a true cosine

Use or disclosure of sensitive information contained on this page is subject to the restriction on the title page of this proposal or document.

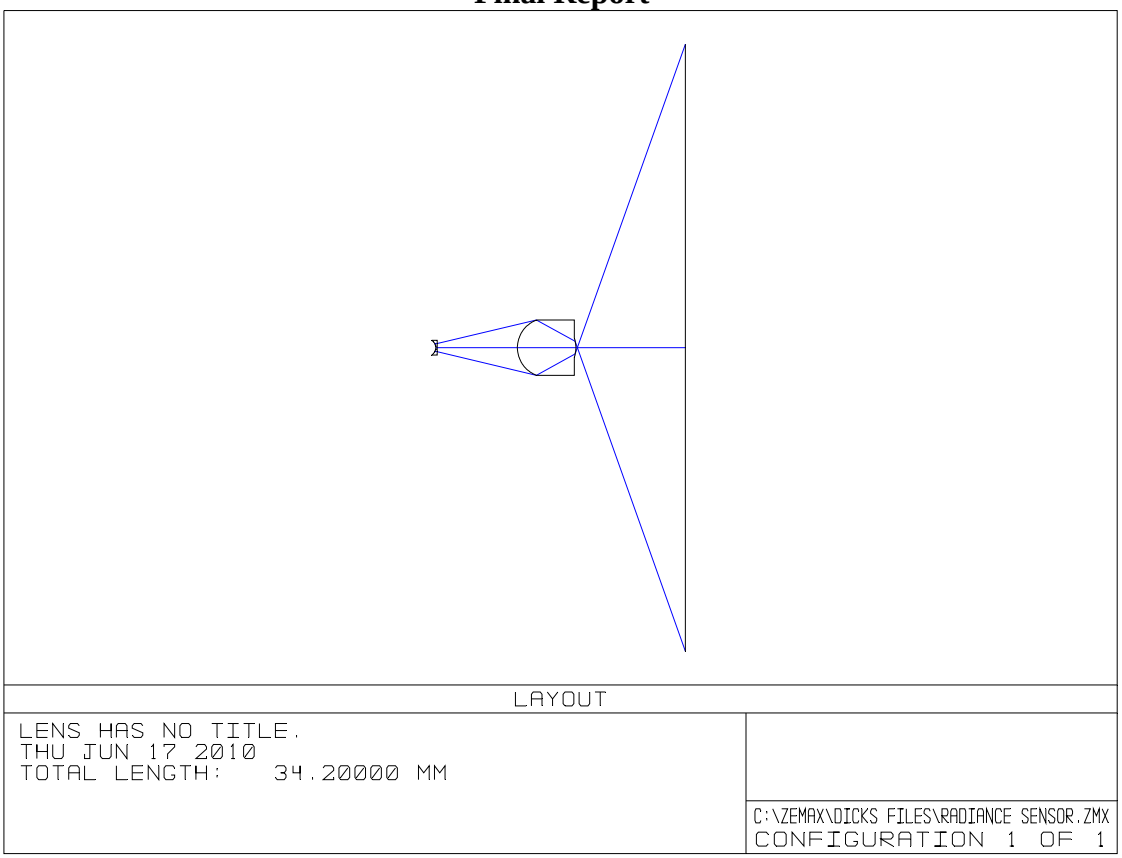

TESTING

To be sure that a ball lens with a Teflon diffusing collector would meet NASA's protocol cosine requirements, Kaitech built an experimental setup to determine design sensitivities and limitations. After trials to determine the best optical fiber to ball separation distance we acquired the following result. Departures from the cosine function for angles greater then 70 degrees are related to positioning the sensors occluding ring which was too high. The figure illustrates the experimental setup for making the irradiance measurements, followed by the actual test results.

TEST DATA

Spectral Irradiance Sensor Test #12- 07/07/2010 Ball Lens Design Tip thickness at 0.060 " T=250

Angle	0	10	20	30	40	50	60	70	80	90
Measured	3970	3950	3785	3492	3105	2635	2105	1523	750	305
Dark	138	138	138	138	138	138	138	138	138	138
Test Value	3832	3812	3647	3354	2967	2497	1967	1385	612	167
True Cosine	3832	3774	3601	3319	2935	2463	1916	1311	665	1
Error %	0.000	-1.013	-1.279	-1.069	-1.080	-1.372	-2.662	-5.681	8.002	-16600

Use or disclosure of sensitive information contained on this page is subject to the restriction on the title page of this proposal or document.

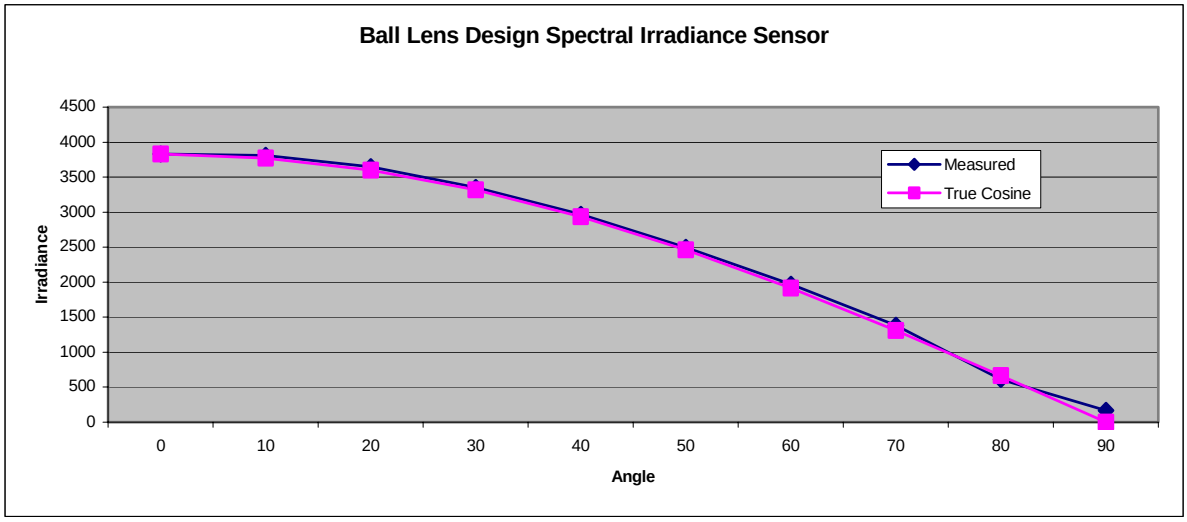

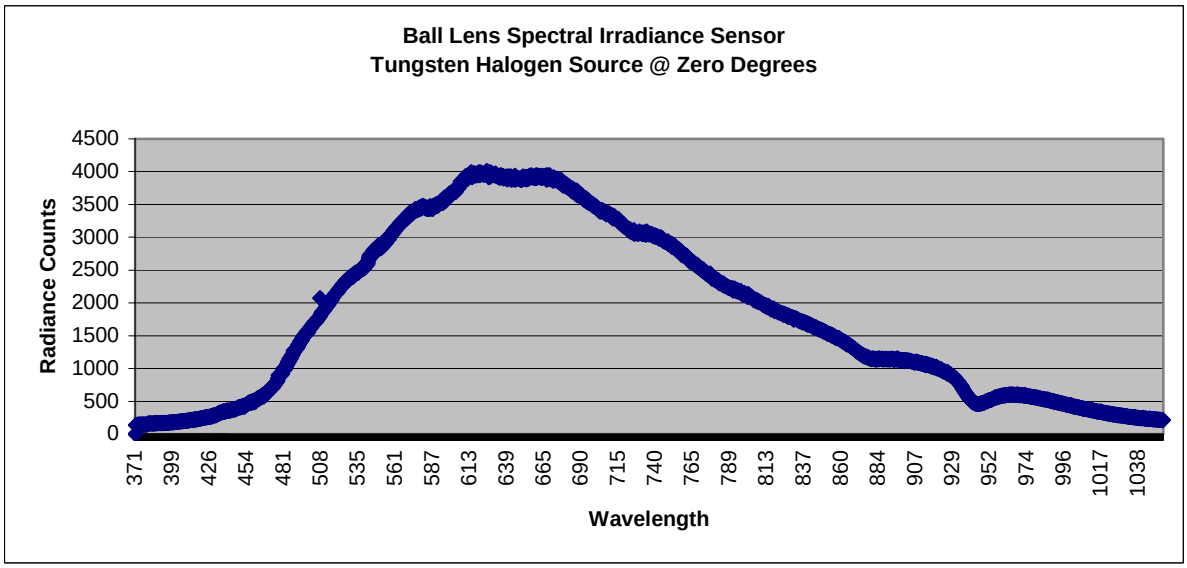

CALIBRATION

The absolute calibration of a Spectral Irradiance Sensor is made in air with a standard source. When the sensor is in water, the calibration coefficient determined in air needs to be corrected for the change in response produced by the different refractive index of the intervening medium that is in contact with the entrance optics. In the case of an in-water sensor designed for irradiance measurements using collectors made of a diffusing material, the change in the absolute response is primarily caused by the reflectance and transmittance of the water-collecting material interface with respect to the air-collecting interface. For this design Kaitech is using PTFE Teflon for the collector with a refractive index = 1.35 which is close to that for seawater refractive index = 1.33 Corrections for differences in the sensor's response will be accounted for through spectral immersion factors applied to the absolute calibration coefficients obtained in air.

Use or disclosure of sensitive information contained on this page is subject to the restriction on the title page of this proposal or document.

EARLY WORK

Kaitech's first Spectral Irradiance Sensor had the following shape. Its features were:

- Teflon collector to glass fiber (NA = .22) to USB-2000 spectrometer
- Fiber is in direct contact with the Teflon cosine corrector
- Cosine corrector has 0.220 dia x ~0.100 tk pilot press fitted to threaded hole
- Cosine corrector flat is 0.275 dia x 0.075 tk with 45˚ outer edge to 0.425 Dia

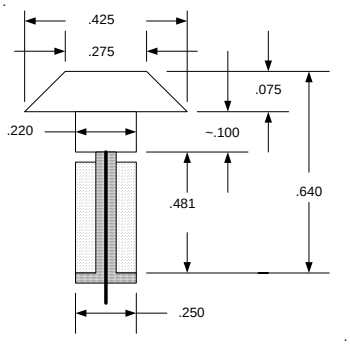

Testing with Ocean Optics [LS-450] Source to fiber to collimator @ 12" from collector face. Set 0˚ to 4047 counts Integration Time at Δt = 1200 ms

Illuminator Angle	0˚	30˚	45˚	60˚	80˚	90˚
True Cosine	4048	3505	2861	2024	704	0
Test #1 Value	4048	3577	2969	2239	1217	807

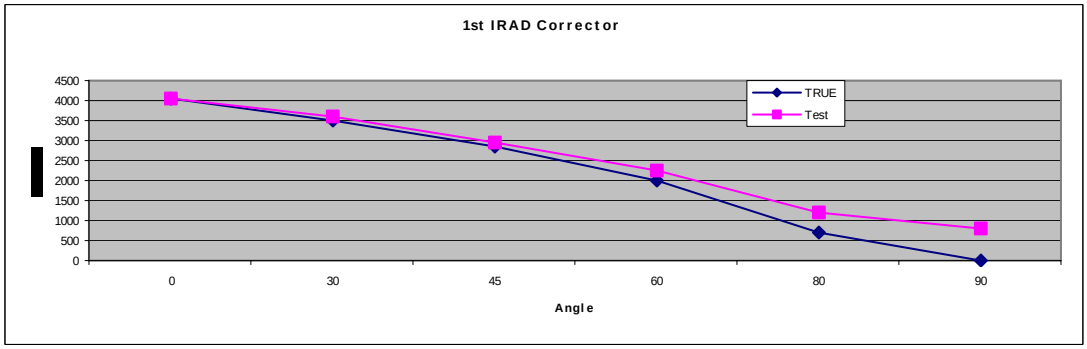

After making several minor changes the design evolved to a flush diffuser and occluding ring

Use or disclosure of sensitive information contained on this page is subject to the restriction on the title page of this proposal or document.

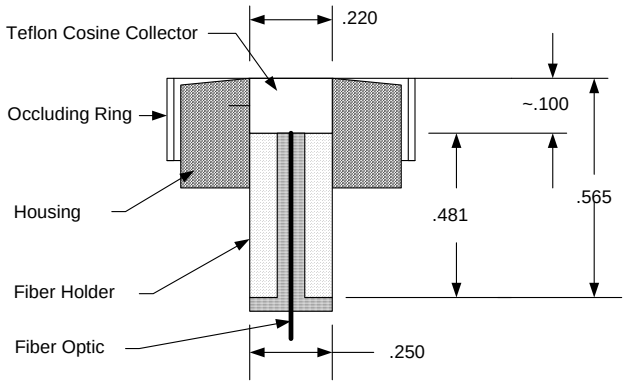

Flush Spectral Irradiance Sensor w/ PTFE Teflon Collector

Test –Flat is Flush, Occluding Ring Flush with Corrector

Angle	0.00	10.00	20.00	30.00	40.00	50.00	60.00	70.00	80.00	90.00
Cosine	1.00	0.98	0.94	0.87	0.77	0.64	0.50	0.34	0.17	0.00
Test #6	T = 500									
Measured	3901.00	3820.00	3680.00	3410.00	2990.00	2585.00	1994.00	1380.00	790.00	229.00
Dark	196.00	196.00	196.00	196.00	196.00	196.00	196.00	196.00	196.00	196.00
Test Value	3705.00	3624.00	3484.00	3214.00	2794.00	2389.00	1798.00	1184.00	594.00	33.00
True Cosine	3705.00	3648.68	3481.59	3208.53	2838.03	2381.57	1852.50	1267.11	643.19	1.00
Error %	0.00	0.68	-0.07	-0.17	1.55	-0.31	2.94	6.56	7.65	-3200.00

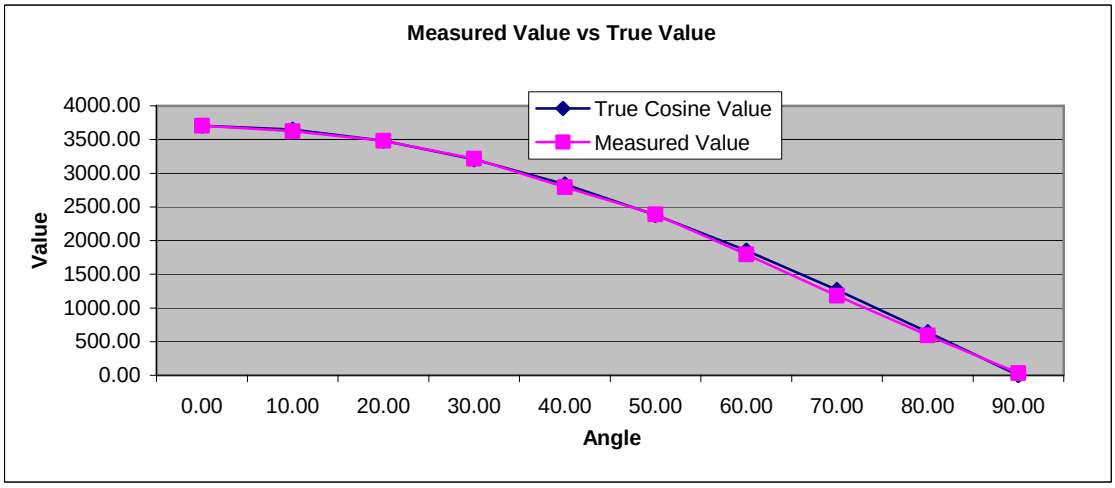

Use or disclosure of sensitive information contained on this page is subject to the restriction on the title page of this proposal or document.

As the axial thickness dimension between the collectors outside surface and the fibers tip was reduced there was a need to extend the collector from its surrounding surface to enable it to collect side-light. This test illustrates the ability to design air cosine collectors.

Extended Collector Spectral Irradiance Sensor w/Occluding Ring

Test Tip thickness at 0.070 "				T-290						
Angle from Source	0	10	20	30	40	50	60	70	80	90
Measured	3980	3940	3783	3490	3100	2628	2082	1470	830	375
Dark	203	203	203	203	203	203	203	203	203	203
Test Value	3777	3737	3580	3287	2897	2425	1879	1267	627	172
True Cosine	3777	3720	3549	3271	2893	2428	1889	1292	656	1
Error %	0.000	-0.468	-0.866	-0.493	-0.132	0.118	0.503	1.915	4.375	-17100

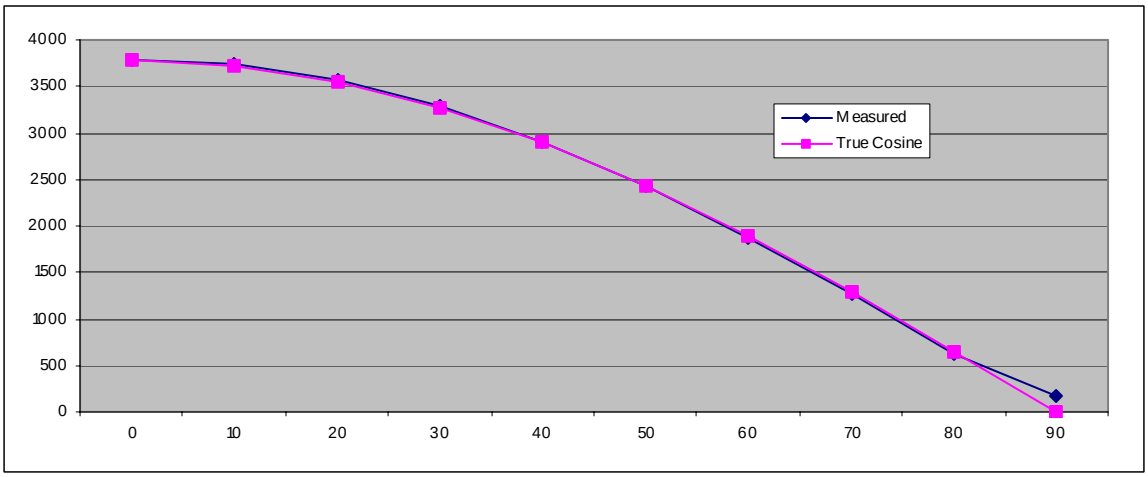

Note 1 Source is at 34 micro Watt. Sample integration time was 290 ms
Note 2 Occluding Ring 0.023" above the Body Face, 0.018 Below Collector Face thus 90 degree error
Note 3 Teflon Collector is 0.041 above the Body Face
Note 4 Teflon's Thickness is 0.070"
Note 5 Sample counts were averaged 10X

Teflon has been used because it is a good diffuser and is also resistant to the elements and ultra-violet (UV) radiation, given its capability to diffuse transmitting lights nearly perfectly. Moreover, the optical properties of PTFE (Teflon) remain constant over a wide range of wavelengths, from UV up to near infrared. Within this region, the relation of its regular transmittance to diffuse transmittance is negligibly small, so light transmitted through a diffuser radiates like Lambert's cosine law.

Use or disclosure of sensitive information contained on this page is subject to the restriction on the title page of this proposal or document.

4.2.2 SPECTRAL RADIANCE SENSOR

DESIGN

Kaitech's Spectral Radiance Sensor Module comes in two versions. The first version, uses a half sphere ball lens and a fiber optic to spectrometer design to measure the radiant power per unit source area per unit solid angle within a 10° Field of View (FOV) in Air, 7.5° FOV in seawater, orthogonal to the sensors face. This design is innovative in that the optical fiber is positioned parallel to the sensing surface allowing miniaturization of the sensor and its placement at the end of cantilevered arms to preclude optical shadowing.

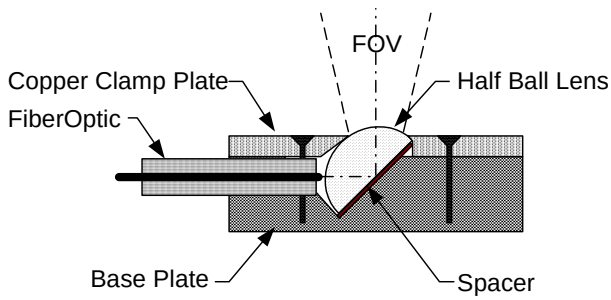

The second version, places a full ball lens into the end face of a Spectral Radiance Sensor module to view zenith or nadir from the WPS Adaptors on the Electronics Housing.

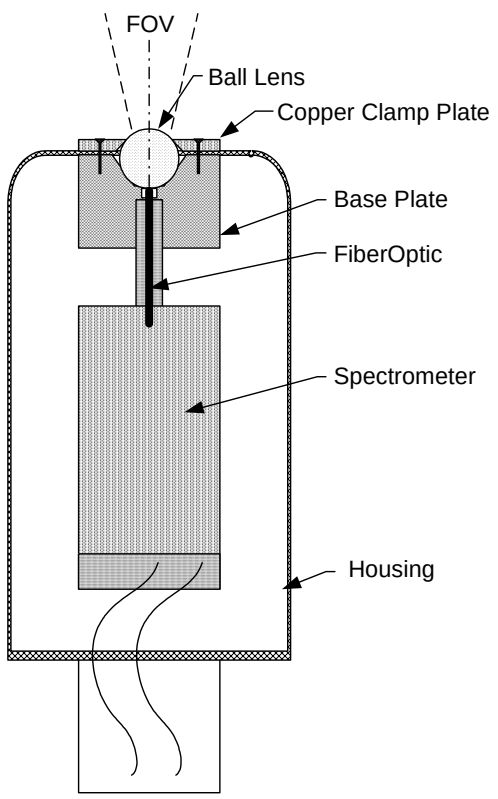

The absolute calibration of a light sensor is made in air with a standard source. When the sensor is used in water, the calibration coefficient determined in air needs to be corrected for the change

Use or disclosure of sensitive information contained on this page is subject to the restriction on the title page of this proposal or document.

in response produced by the different refractive index of the intervening medium that is in contact with the entrance optics. In the case of an in-water sensor designed for irradiance measurements using collectors made of a diffusing material, the change in the absolute response is primarily caused by a change in the reflectance and transmittance of the water–collector interface with respect to the air–collector interface. These changes in the sensor's response are accounted for through spectral multiplication factors, the so-called immersion factors, applied to the absolute calibration coefficients obtained in air.

OPTICAL DESIGN

A 1 mm Fiber Optic at 1.2 mm separation from a 8 mm diameter BK7 Ball Lens produces a 9.53 degree FOV in air or 7.16 degree FOV in Water.

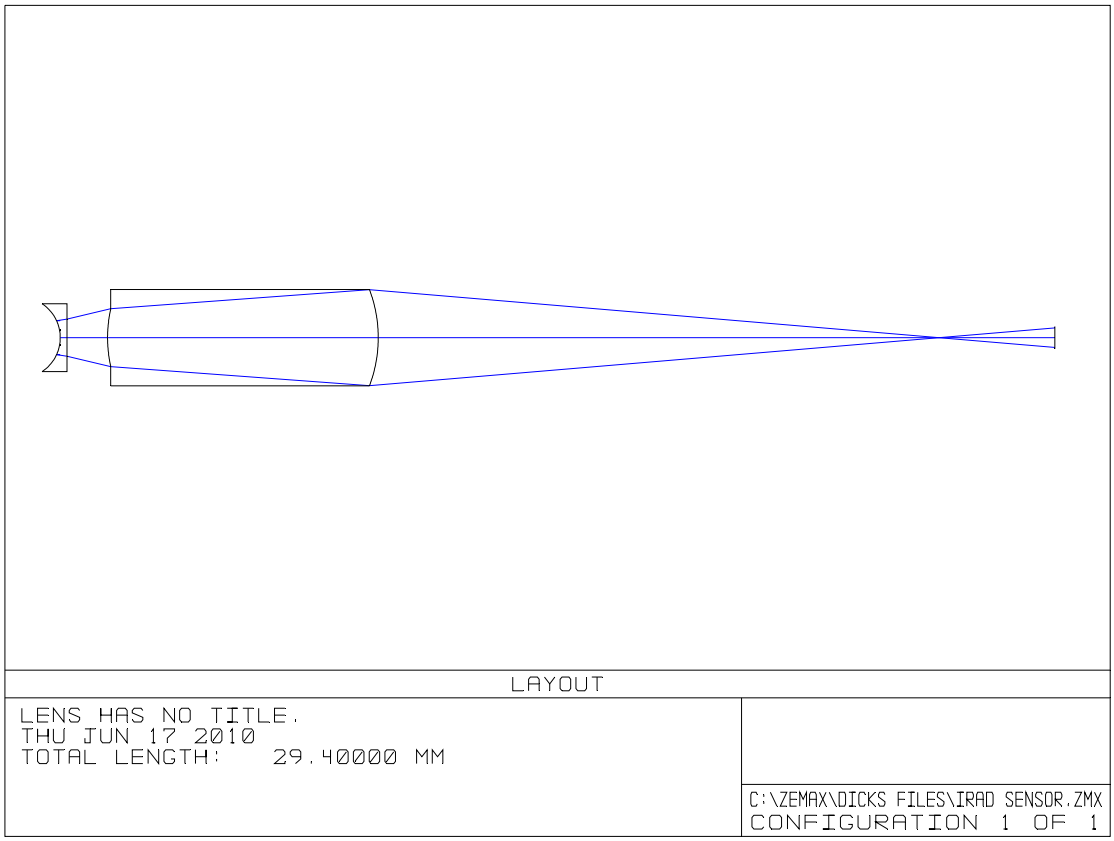

Use or disclosure of sensitive information contained on this page is subject to the restriction on the title page of this proposal or document.

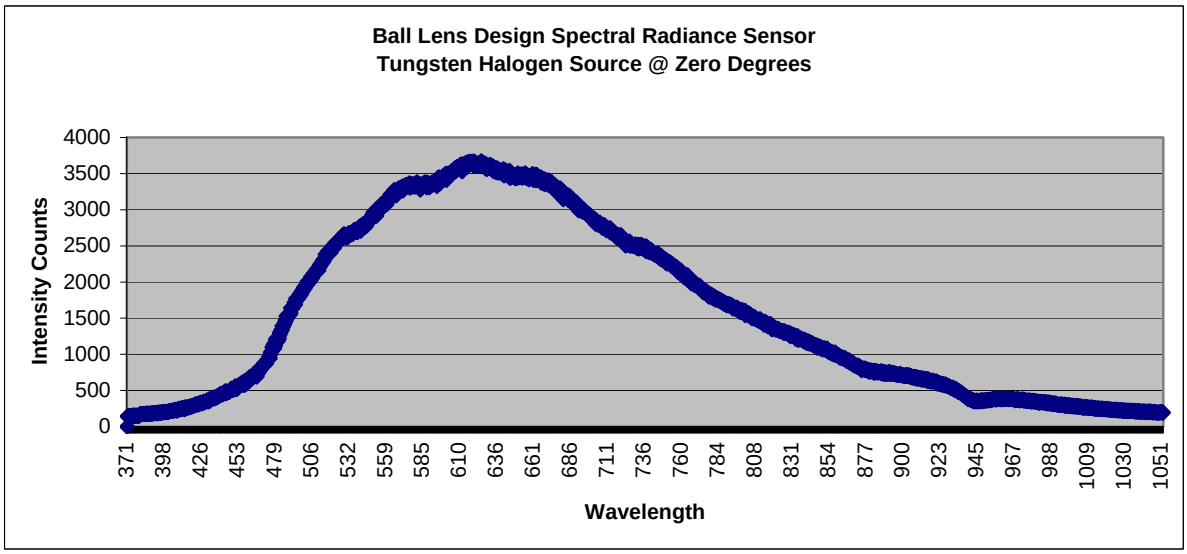

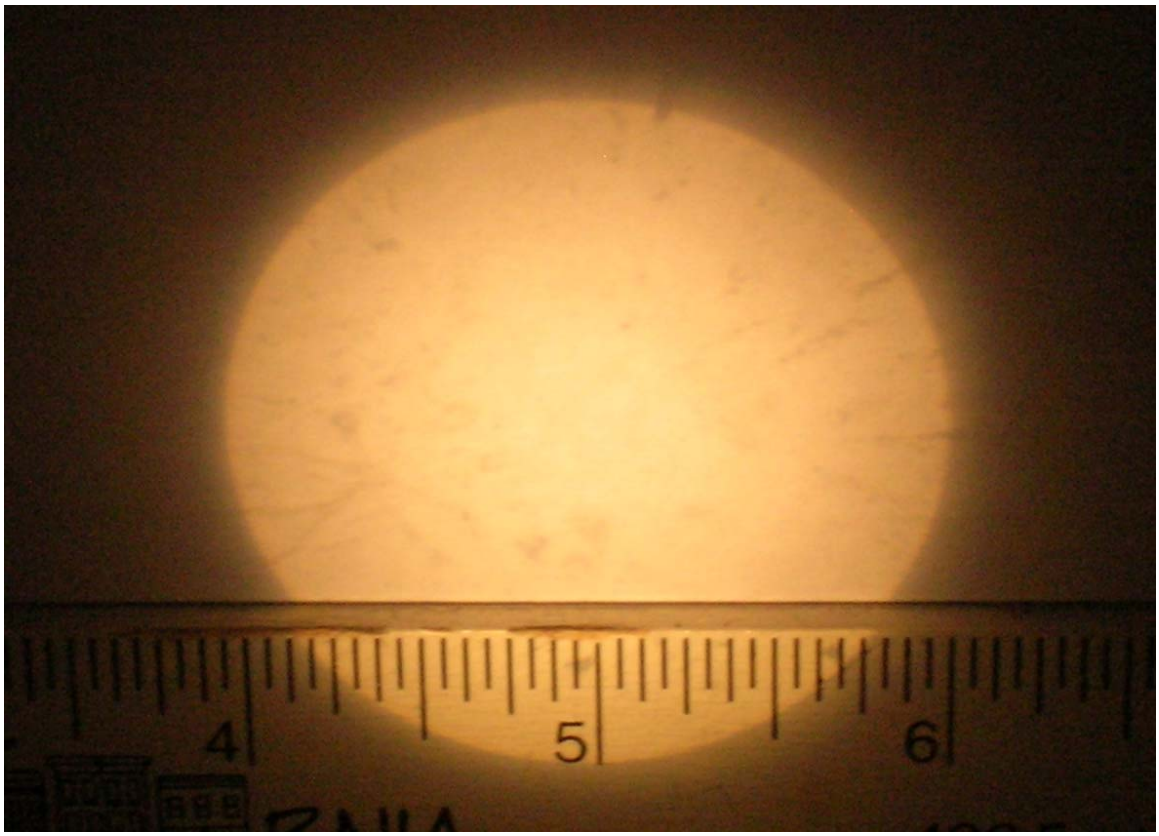

Spectral Radiance Sensor --2.0" diameter image of a Tungsten Halogen source projected from 12.0" distance, delivers a 9.53º FOV in air, 7.16º FOV in water N =1.33

Use or disclosure of sensitive information contained on this page is subject to the restriction on the title page of this proposal or document.

4.2.3 SPECTRAL ABSORPTION SENSOR

Light transmission through a water sample is determined by physical properties such as particle size, shape, SSC, composition, and chemical properties such as the presence of absorbing dissolved matter. There is enormous environmental variation in the properties resulting in a nearly infinite number of unique optical characteristics for natural and man-influenced water. However, consistent light transmission through a water sample is essential for precise measurements. The following references were used in this work:

1) Integrating cavity absorption meter, Fry, Kattawar, Pope, Applied Optics, Vol. 31, No. 12, 20 April 1992.

2) Integrating cavity absorption meter, Measurement Results, Pope, Fry, Montgomery, Sogandares, Ocean Optics X (i990), SPIE Vol. 1302

3) Modeling the performance of an integrating-cavity absorption meter: theory and calculations for a spherical cavity, Kirk, Applied Optics (1995) Vol 34, No 21

4) Absorption spectrum ~380–700 nm of pure water. II. Integrating cavity measurements, Pope and Fry, Applied Optics, Vol. 36, No. 33, 20 November 1997. The spectral absorption results for pure water are shown in the figure below along with Morel (1974) calculation of pure water spectral scattering.

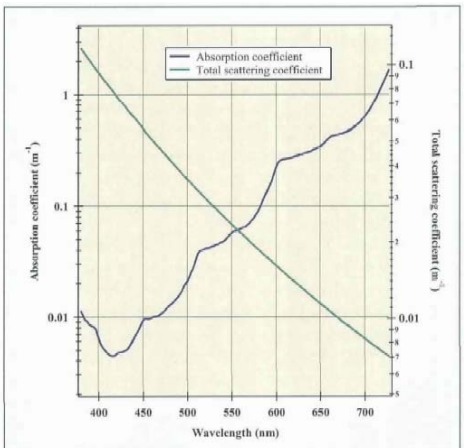

Figure 5. Measurements of the spectral absorption coefficient of pure water (Pope and Fry, 1997) and the theoretical calculation of the spectral total-scattering coefficient of pure water (Morel, 1974).

BACKGROUND

This task began by examining the theory behind the integrating cavity as an instrument for measuring spectrally the absorption of seawater. We started by retracing/developing an Excel model of Kirk's water-filled spherical cavity analysis. We examined cavity sizes from 24 to 100 mm, looking for sensitivities appropriate for measurements in the littorals and settled on a 38 mm design. Then we talked with cavity suppliers and found that oils can contaminate the highly reflective materials and that

Use or disclosure of sensitive information contained on this page is subject to the restriction on the title page of this proposal or document.

generally a transparent container was needed to separate contaminating water from clean reflective cavity surfaces. The alternative was to use the multiple concentric cavity designs reported by Pope and Fry for measuring pure water. The following text reports on Kaitech's development of a flow through integrating cavity spectral absorption sensor. The design is a work in progress with laboratory mockups constructed to verify and test sensor, cavity, and sample probe placement to arrive at an optimal absorption measurement system.

DESIGN

Methods of measuring optical absorption of water include:

(1) Measure the attenuation of a light beam passed through a long tube of water, then measure the scattering coefficient, and correct for the scattering losses;
(2) Use a isotropic point source and measure the attenuation at increasing radial distances;
(3) Measure the Reflectance of a sample at the entrance window of an integrating cavity;
(4) Make Photothermal measurements of the sample's refractive index;
(5) Use Adiabatic laser calorimetry;
(6) Use Slit-pulsed laser measurement of the sample's extinction and scattering properties;
(7) Use Optoacoustic techniques to measure the sound pulse produced by an incident light;
(8) Measure the irradiance from an isotropic illuminated sample contained within an integrating cavity.

Kaitech's Spectral Absorption Sensor is an Integrated Cavity Absorption Meter (ICAM) based on Method (8) and the ideas put forward by Elterman (referenced in Fry)- *that if a sample is in an isotropic homogeneous light field, the absorbed radiant power will be independent of scattering effects*, the designs of Fry et al. [1,2], and the analysis and designs of Kirk[3] *which show that within an integrating cavity optical absorption is independent of scattering*.

Fry showed that in a multi-cavity integrating cavity instrument where the absorbing sample completely filled the inner glass cavity and was irradiated with a homogeneous and isotropic radiance distribution, the absorbed power was a linear function of the absorption coefficient,

$$P = 4aVF_o ,$$

where V is the volume of the fluid within the sample cavity and F_0 is the outwardly directed irradiance at the surface of the sample cavity.

In the designs by Kirk, Pope, Fry, et al., the suggested cavity diffusing surface material is a reflective sintered polytetrafluoroethylene material called Spectralon. This material was developed by Labsphere, which claims a long term (>99%) reflectance stability for

Use or disclosure of sensitive information contained on this page is subject to the restriction on the title page of this proposal or document.

its commercial integrating sphere products. For measuring water's absorption Kirk and others suggest a design, which completely fills the integrating cavity with the water sample directly in contact with the Spectralon surface. On the other hand, the dual cavity designs from Pope and Fry feature a system where the water sample is contained in a glass envelope within a Spectralon integrating cavity. Investigating the reasoning for this arrangement, we found that while hydrophobic, sintered polytetrafluoroethylene materials can absorb oils from the seawater. These oils can change the surfaces' optical reflectance properties and falsify the measurements. To avoid fluid contaminations Kaitech has followed Pope and Fry's lead and developed an integrating cavity design that constrains the fluid within a cylindrical glass tube concentrically located within a highly diffuse reflectance cavity. Initially the sample tube cavity will be completely transparent. More opacity and reflectivity will be incrementally added to the sample cavity walls in later versions. In addition, the design employs an elliptically shaped cavity to (1) increase the water's volume and (2) to increase the cavities relative surface to volume ratio. Lastly, Kaitech's design measures the sample's absorption at the sample's center point. Later versions will likely employ two or more detectors on fiber optic probes.

Kaitech's Spectral Absorption Sensor's design offers the advantages of being simple, sensitive, rugged, and capable of in situ measurements. The theoretical basis is sound and well documented with the following features:

- Our dual cavity system of integrating cavities consists of a cylindrical sample cavity completely contained within an elliptical integrating cavity.
- Source light is directly transmitted through the outer elliptical cavity's wall.
- The outer cavity is made from a highly diffuse Lambertian material.
- Radiation introduced into the cavity is homogenously reflected in all directions.
- The emitting radiation produces isotropic illumination of the sample.
- The radiance level is directly proportional to total optical power introduced.
- The sample is contained within a cylindrical glass tube cavity to protect the sensor from contamination of reflecting surfaces.
- Geometry and size minimize absorption changes with distance from the wall.
- Absorption is measured at center of the cylindrical tube in our laboratory version.

Use or disclosure of sensitive information contained on this page is subject to the restriction on the title page of this proposal or document.

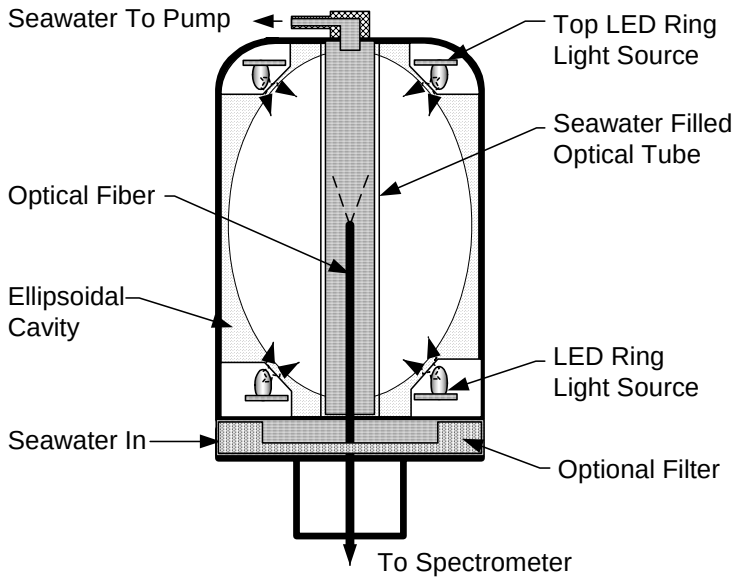

The figure above sketches out the sensor's layout details. In this flow-thru-tube technique, water flows through an optically transparent tube centrally located in an integrating cavity. Within the cavity, optical absorption is measured independently of scattering. The only practical restrictions for measurement reproducibility of particles and dissolved materials is that:

- The volume of seawater within the sphere be constant.
- That incoming light makes at least one reflection off the ellipsoidal cavity's surface before reaching the detector.

The advantages of this design are threefold. First, photons undergo many more reflections. This results in a higher sample intercept with correspondingly long effective path lengths of great importance for weakly absorbing samples. Second, because the light field within the cavity is already totally diffuse, it cannot be made more diffuse by scattering within the sample. Therefore measurement should be insensitive to scattering. Third, this design permits the exchange of samples without opening the cavity and avoids direct contact of a "dirty/oily" seawater samples with the highly reflective cavity walls.

LED RING LIGHT SOURCE

The LED Ring light source shown below is a miniature electro-opto-mechanical assembly mounting up to 16 LED's grouped into 6 circuits on a ring shaped circuit board, with an envelope size of ~1.0" ID, 1.5"OD, by ~1/4" high. For spectral stimulation the candidate wavelengths are: 405, 470, 505, 525, 560, 570, 574, 592, 620, 633, 635, and 660 nm. Note: the LED colors can be illuminated individually or in combinations using drive electronics unique to the sensor's illumination requirements.

Use or disclosure of sensitive information contained on this page is subject to the restriction on the title page of this proposal or document.

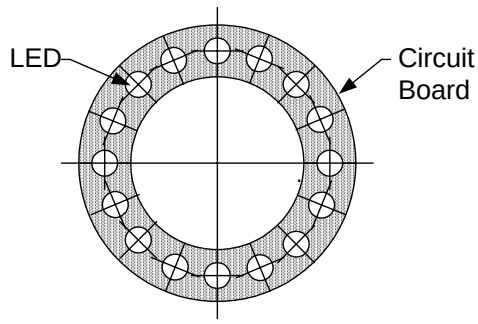

THEORY AND CALCULATIONS

The theory described herein is that of a completely developed Phase II instrument, which is not extant at this time. It however allows an understanding of our laboratory setup to test the cavity technique for making sensitive absorption measurements.

The irradiance within the elliptical cavity is F_2. Since its wall is Lambertian, light in the elliptical cavity is from every direction, thus avoiding bright spots from entering the sample cavities wall. Some portion of F_2 will pass through the cylindrical wall and into sample cavity. The fraction of F_2 radiation incident on a wall that is transmitted is proportional to $(1 - p)$, where p is the reflectivity of the wall. For Spectralon $p \approx 99\%$ and thus $(1 - p)$ is very small. Hence the fraction of light transmitted in a single reflection is also very small. Nevertheless, since the radiation bounces many times in the elliptical cavity it effectively tries many times to enter the sample and the sample's radiance builds up to an appreciable value. The irradiance within the sample container wall is denoted as F_1, and the outward directed irradiance from the sample is denoted as F_0. (Note: In the laboratory tests and results section that follows F_1 and F_0 and correspondingly S_1 and S_0 will often correspond to the signal from the detector when the sample is not present and present respectively.) We assume the radiance distribution within each integrating cavity section is isotropic and homogeneous. If the absorption of the wall and the sample was precisely zero, the equilibrium condition for the irradiances would be $F_2=F_1=F_0$. In practice this is not the case, but we can use conservation of energy to determine their relationships. At the boundary between interior surface of the cylindrical wall and the sample, it is clear that the energy entering the sample equals the energy leaving the sample plus the energy absorbed by the sample.

$$F_1A_0\,(1-p) = F_0A_0\,(1-p) + F_0A_D + 4\,aF_0V_0$$

where p denotes the reflectivity at the boundary (wavelength dependent), A_0 is the area of the boundary surfaces of the cylindrical cavity, A_D is the area of the fiber optic detector for measuring F_0, V_0 denotes the volume of the sample, and a denotes the absorption coefficient of the sample. Solving this equation for the absorption coefficient gives,

$$a = 1/(4V_0)\ [(F_1/F_0)\,A_0\,(1-p) - \{A_0(1-p) + A_D\}\ ]$$

Use or disclosure of sensitive information contained on this page is subject to the restriction on the title page of this proposal or document.

Now the measured signals which are proportional to F_1 and F_0, are designated by S_1 and S_0 respectively. The ratio F_1/F_0 can then be replaced by S_1/S_0. If we now also note that for a fixed wavelength and volume, the parameters p. A_0, A_D, and V_0 are all constants, then we can write,

$$a = K_1(S_1/S_0) - K_2$$

or, explicitly showing the dependence on V_0,

$$aV_0 = K_3\ (S_1/S_0) - K_4$$

where K_1 , K_2, K_3 and K_4 are wavelength dependent calibration constants, which must be experimentally determined.

CALIBRATION

An experimental model of Kaitech's Spectral Absorption Sensor has been assembled and preliminary measurements made to exhibit the concepts potential utility. Note that this is an experimental model. It is not configured for flowing water nor is it made from marine compatible materials. It consists of a PTFE non-linear reflectance spherical cavity with an extended cylindrical mid-section making the cavity 1.5" diameter by 2.5" length. The cavity is illuminated only through its top wall, using an automotive secondary ring light product holding 6 White LEDs. Mounted concentrically through the integrating cavity is a small glass tube having dimensions 0.430 OD by 0.353 ID with an optical fiber collector mounted centrally in the glass tube. All of the above items are contained within a metal shell to exclude any ambient illuminations. The optical fiber is connected to a spectrometer for making the absorption measurements. The following figure shows Kaitech's first spectral absorption results measuring distilled water and distilled water with a black dye (F_0), both relative to an empty cavity (F_1). This assembly is illuminated through the cavity's wall with the six White LED sources and measured using an Ocean Optics S2000 USB spectrophotometer with the collecting optical fiber located at the bottom of the glass tube. The spectral shape is that of the White LED's. The yellow line in the following graph represents spectral absorption (380 to780 nm) of the dye, while the black and blue lines represent an empty or clear sample water measurement.

Use or disclosure of sensitive information contained on this page is subject to the restriction on the title page of this proposal or document.

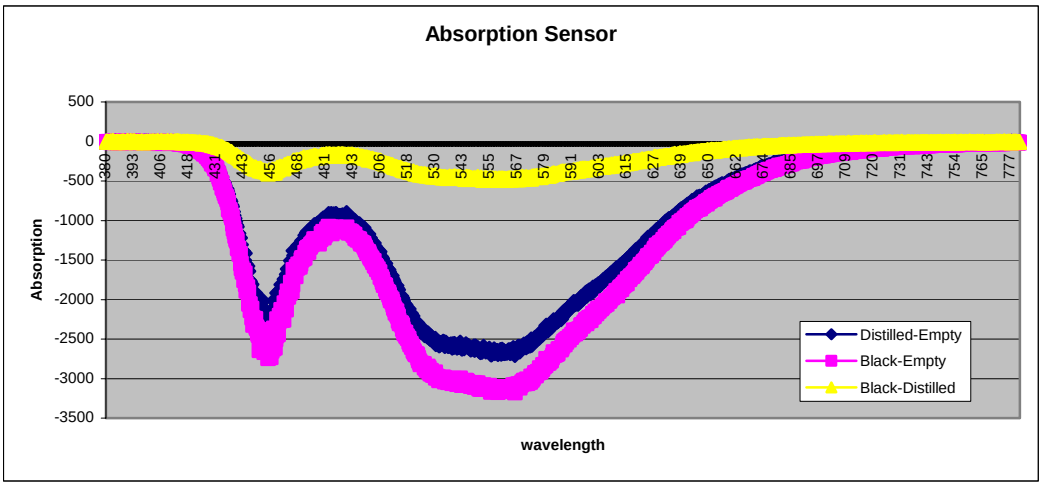

The next figure shows a second series of tests, this time with the tip of the collecting fiber at the half height position of the glass sample tube. The spectrophotometer measures the spectral absorption of the dye relative to a sample containing distilled water with no dye. We do not know the actual total absorption of these samples as total absorption = absorption of dye + absorption of water, but we know that the change in absorption between each sample will produce a unique value for the ratio ($S_1/S_0 = F_1/F_0$).

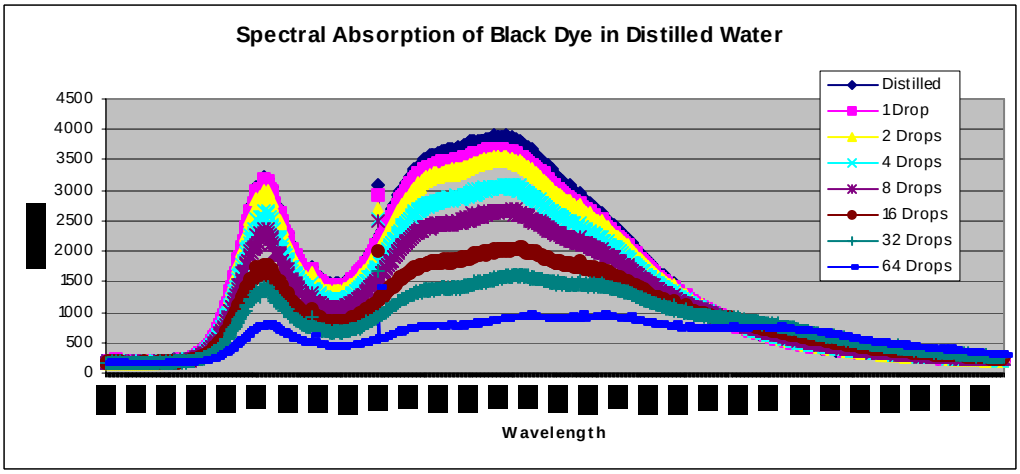

Using the method of least squares and plotting the change in absorption vs. (S_1/S_0) for a number of samples of different absorption, we can determine the slope value for K_1 in the equation

$$a = K_1(S_1/S_0) - K_2. \qquad (1)$$

The fitted line in the next figure at a wavelength of 532 nm intercepts the ordinate at 0 and has a S_1/S_0 slope of 41.75. Note that as the dye concentration increases the S_0 signal will decrease linearly and at sufficiently high dye concentrations the sample's absorption can become so large that it becomes anisotropic and a nonlinear function of (S_1/S_0).

Use or disclosure of sensitive information contained on this page is subject to the restriction on the title page of this proposal or document.

The linear absorption range of (S_1/S_0) will establish the dynamic range of the sensor with respect to (S_1/S_0). The value for K_1 must be determined from this linear region. After values for K_1 have been determined, we must determine the intercept value (K_2) for equation (1). To fix the intercept we must have one sample where the total absorption is known. One approach is to measure the value of (S_1/S_0) with the cavity empty and set the absorption equal to zero. We can then solve equation (3) for K_2. This assumes the optical properties of the sensor do not change appreciably when the index of refraction within the sample volume changes.

By determining the intercept with the cavity empty, the sensor will measure the total absorption of the solution/suspension placed in sample cell. The absorption of just the suspended particulates, can be determined by measuring the sample with the particles in suspension, then filtering the solution to remove the particles, and finally measuring the filtrate. Subtracting the filtrate absorption from the suspension absorption will give the absorption of the particulate matter only.

For measuring the absorption of suspended particulate matter or dissolved substances, where the absorption of water must be subtracted from the total absorption within the cavity, another approach is preferable, simpler, and more precise since the entire calibration can be done with the sample volume filled with water. Specifically, we calibrate by taking the zero of absorption to be that of water. This allows both K_1 and K_2 to be determined from the best fit of absorption vs. (S_1/S_0) for the calibration samples where one sample is pure water rather than an empty cavity. The absorption measured in the sensor under these constraints will be only the absorption of the dissolved substances and the suspended particulate matter without the absorption of the water. The sensor provides the capability of measuring the absorption of suspended particulates as well as the absolute absorption of the medium, neither of which is possible in a spectrophotometer.

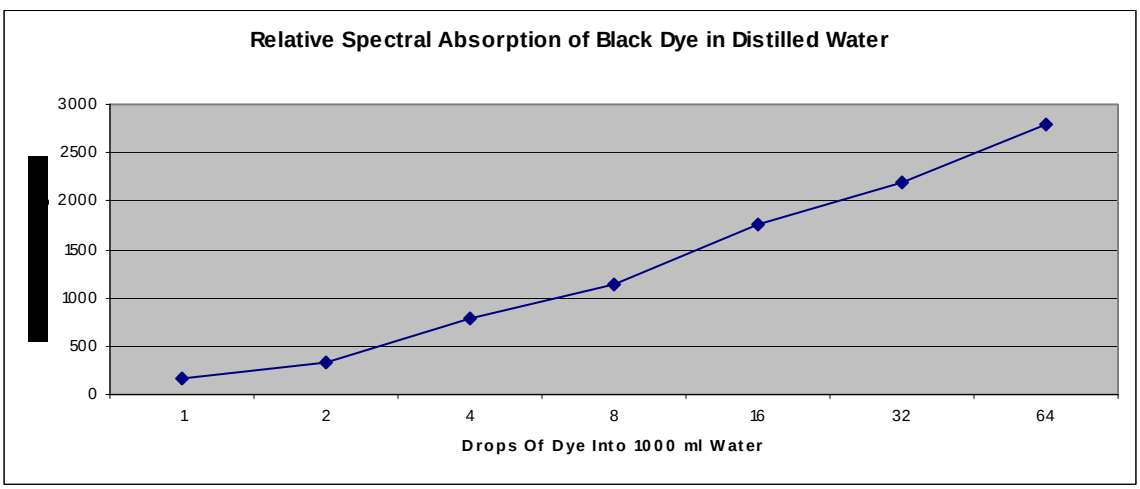

Use or disclosure of sensitive information contained on this page is subject to the restriction on the title page of this proposal or document.

EARLY WORK

Kaitech's initial designs considered the development of a flow through seawater filled spherical cavity. For this we evaluated the spherical cavity work done by Kirk. We believe that Kaitech's instruments are best suited for operations in littoral waters and therefore developed the analyses and modeling for smaller sized cavities and for cavities made from PTFE Teflon (90 to 95% reflective with wavelength) or with painted or sprayed on materials such as Kodak's 96% highly reflective Lambertian coating, Barium Sulfate. The figure below shows some early system parts.

Spectral Absorption Sensor PTFE Cavity and Glass Tube Parts

In addition, Kaitech's design laboratory made experimental models to evaluate the best locations for the optical fibers to measure the fluids absorption. For example, Kirk's Point Source ICAM design was reversed engineered to substitute a detector for the light source and achieved impressive results now incorporated in the above design. The following figure depicts an early spherical cavity with the detector located at the sphere's

Use or disclosure of sensitive information contained on this page is subject to the restriction on the title page of this proposal or document.

center. This hardware also demonstrated the utility of illuminating the cavity from its outside.

Early Spectral Absorption Sensor PTFE Spherical Cavity

The following tables and charts are representative of the types of studies and measurements done during the initial period of this program. They indicate some of the issues and approaches taken to start the program.

Use or disclosure of sensitive information contained on this page is subject to the restriction on the title page of this proposal or document.

EARLY WORK TO VERIFY USING A WATER FILLED SPHERICAL CAVITY

Absorption Sensor Sizing vs Cavity Diameter vs Absorption

Kirk's Paper-Appl OpticsV34 Modeling the performance of a integrating cavity absorption meter: theory and calculations for a spherical cavity

PL= path length Ps= probability survival F1= cavity input = FE empty F0= cavity output F1/F0= HED Theory

Dia mm	Dia m	Radius	Volume	Area	Holes	%	Area-H	Rfl	1-Rfl	Ab	F1/F0	F0/F1	PL Full	Ps	PL Emp
25	0.025	0.0125	0.0000	0.0020	0.0001	6.32	0.0018	0.992	0.008	0.03	1.06	0.941	1.96	0.9995	2.08
50	0.050	0.0250	0.0001	0.0079	0.0001	1.58	0.0077	0.992	0.008	0.03	1.13	0.889	3.70	0.9990	4.17
75	0.075	0.0375	0.0002	0.0177	0.0001	0.70	0.0175	0.992	0.008	0.03	1.19	0.842	5.26	0.9985	6.25
100	**0.100**	**0.0500**	**0.0005**	**0.0314**	**0.0001**	**0.39**	**0.0313**	**0.992**	**0.008**	**0.03**	**1.25**	**0.800**	**6.67**	**0.9980**	**8.33**
125	0.125	0.0625	0.0010	0.0491	0.0001	0.25	0.0489	0.992	0.008	0.03	1.31	0.762	7.94	0.9975	10.42
150	0.150	0.0750	0.0018	0.0707	0.0001	0.18	0.0705	0.992	0.008	0.03	1.38	0.727	9.09	0.9970	12.50
175	0.175	0.0875	0.0028	0.0962	0.0001	0.13	0.0960	0.992	0.008	0.03	1.44	0.696	10.14	0.9965	14.58
200	0.200	0.1000	0.0042	0.1256	0.0001	0.10	0.1255	0.992	0.008	0.03	1.50	0.667	11.11	0.9960	16.67
225	0.225	0.1125	0.0060	0.1590	0.0001	0.08	0.1588	0.992	0.008	0.03	1.56	0.640	12.00	0.9955	18.75
250	0.250	0.1250	0.0082	0.1963	0.0001	0.06	0.1961	0.992	0.008	0.03	1.63	0.615	12.82	0.9950	20.83
275	0.275	0.1375	0.0109	0.2375	0.0001	0.05	0.2373	0.992	0.008	0.03	1.69	0.593	13.58	0.9945	22.92
300	0.300	0.1500	0.0141	0.2826	0.0001	0.04	0.2825	0.992	0.008	0.03	1.75	0.571	14.29	0.9940	25.00
325	0.325	0.1625	0.0180	0.3317	0.0001	0.04	0.3315	0.992	0.008	0.03	1.81	0.552	14.94	0.9935	27.08
350	0.350	0.1750	0.0224	0.3847	0.0001	0.03	0.3845	0.992	0.008	0.03	1.88	0.533	15.56	0.9930	29.17
375	0.375	0.1875	0.0276	0.4416	0.0001	0.03	0.4414	0.992	0.008	0.03	1.94	0.516	16.13	0.9926	31.25
400	0.400	0.2000	0.0335	0.5024	0.0001	0.02	0.5023	0.992	0.008	0.03	2.00	0.500	16.67	0.9921	33.33
425	0.425	0.2125	0.0402	0.5672	0.0001	0.02	0.5670	0.992	0.008	0.03	2.06	0.485	17.17	0.9916	35.42
450	0.450	0.2250	0.0477	0.6359	0.0001	0.02	0.6357	0.992	0.008	0.03	2.13	0.471	17.65	0.9911	37.50
475	0.475	0.2375	0.0561	0.7085	0.0001	0.02	0.7083	0.992	0.008	0.03	2.19	0.457	18.10	0.9906	39.58
500	0.500	0.2500	0.0654	0.7850	0.0001	0.02	0.7849	0.992	0.008	0.03	2.25	0.444	18.52	0.9901	41.67

Use or disclosure of sensitive information contained on this page is subject to the restriction on the title page of this proposal or document.

OUTPUT VS CAVITY DIAMETER AND VS PATH LENGTH

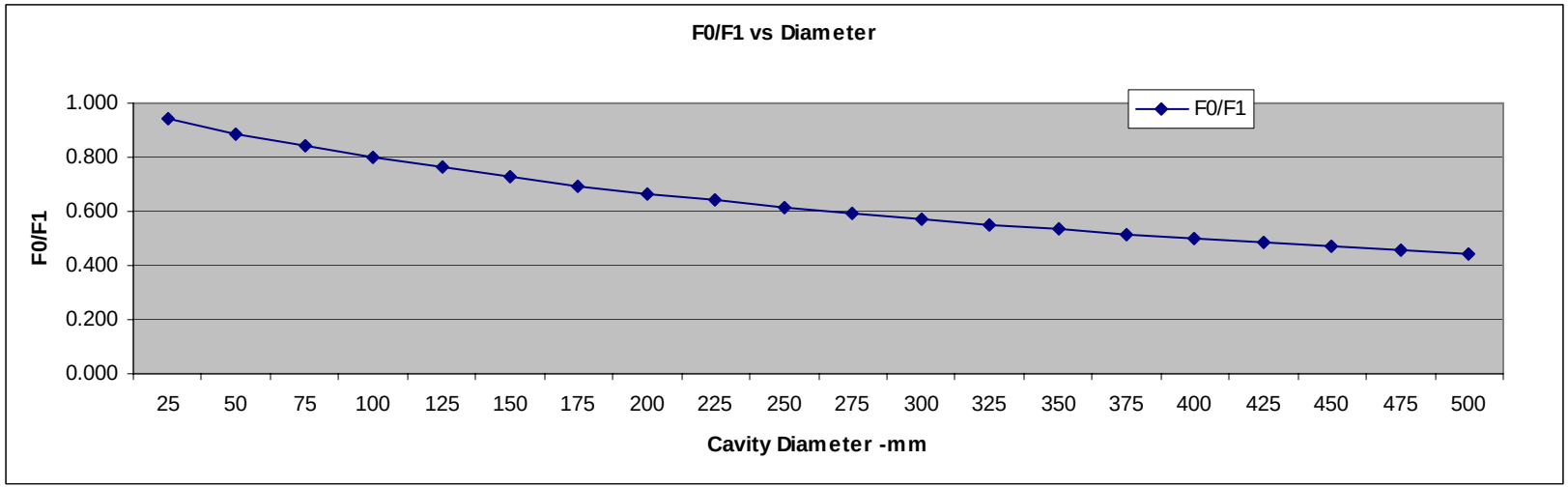

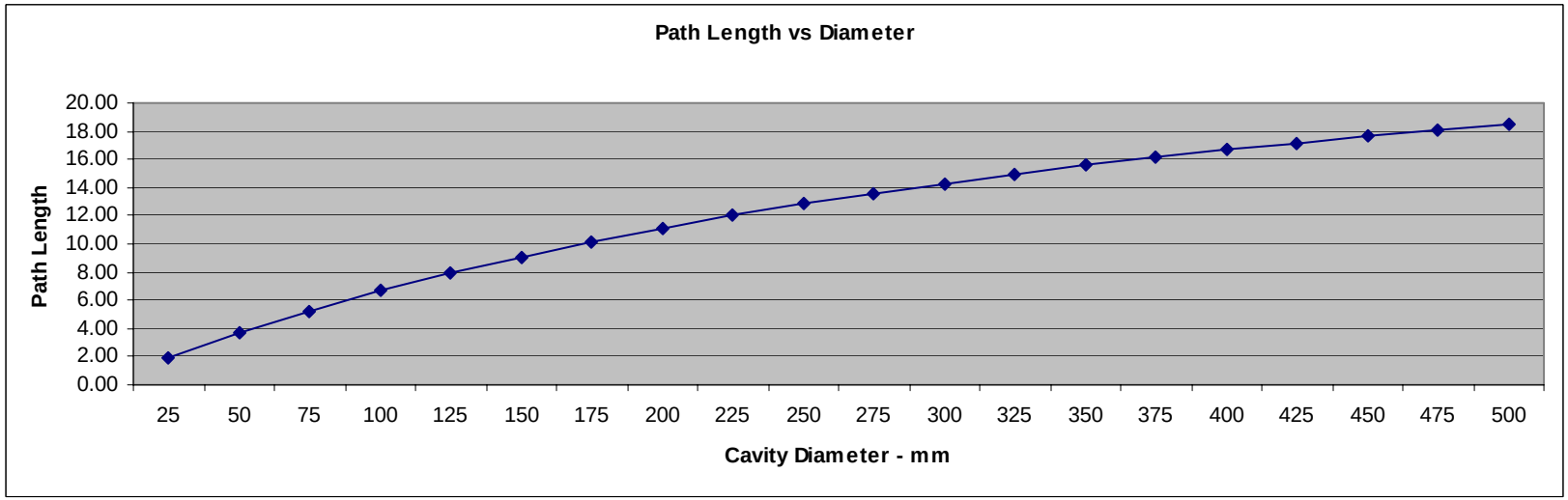

OUTPUT VS THE CAVITIES SURFACE REFLECTANCE

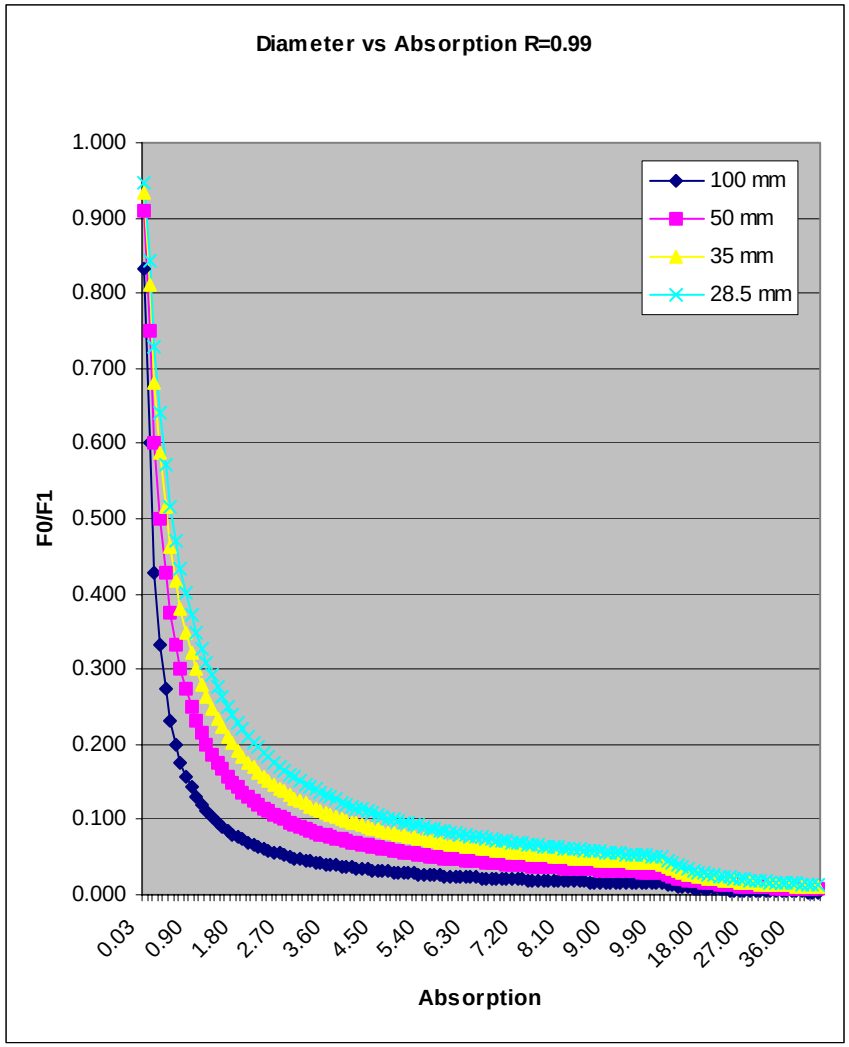

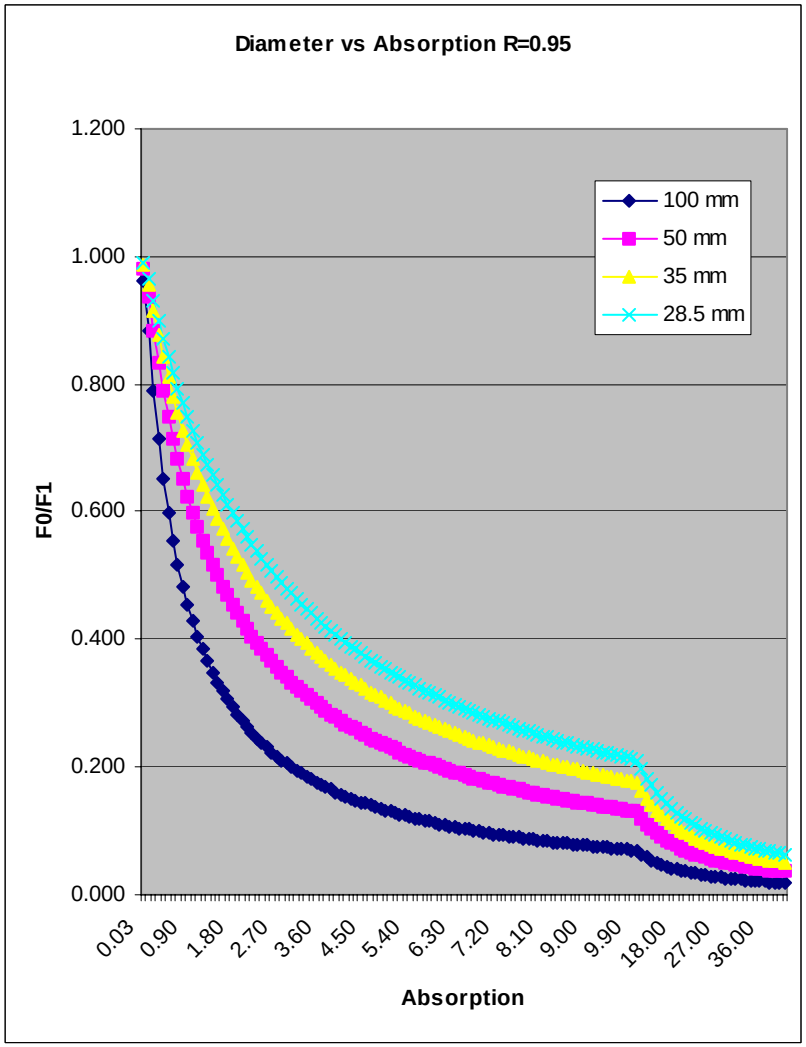

4.2.4 SPECTRAL BEAM ATTENUATION SENSOR

The spectral beam attenuation coefficient, c(λ), is a measure of the light loss from the combined effects of absorption, a(λ), and scattering, b(λ), over a unit length of travel in an attenuating medium. For sea water the units of c(λ) are generally expressed in m^{-1}. An easy way to remember the relationship among these properties is to note that a(λ) + b(λ) = c(λ). It is also important to remember that a(λ), b(λ), and c(λ) are inherent optical properties (IOP) that do not depend on how a sample is illuminated. They are the same during the day and night. In the following the spectral dependence will be understood such, for example, $c(\lambda) \equiv c$.

Attenuation may serve as a proxy for particulate matter and is a key parameter in visibility algorithms for the aquatic environment.

METHODS OF MEASUREMENT

<u>The conventional method</u> for determining c is to project a well collimated light beam from a stable light source of radiance L_0 over a path of known length, x. Light from the beam will be lost due to the aforementioned absorption and scattering. The remaining unscattered and unabsorbed light in the beam after traversing the length x is then given as L_x. The value of this radiance would be measured with a radiometric detector, which ideally would collect only the light remaining in the beam. In fact some very narrow forward scattered light will be present in a real system, biasing the measurement. It is known that the light remaining in the beam at x is given by the equation

$$L_x = L_0 \exp(-cx).$$

Thus c is given by the relationship

$$c = \frac{-1}{x} \ln\left(L_x / L_0\right).$$

For this method to be accurate it is necessary that both the source and receiver be very stable or that fluctuations in either be carefully co-recorded. In this manner *c* measurements will be accurate. Careful designs to limit instability and account for fluctuations have underlain the history of beam attenuation measurements.

A measurement of <u>relative beam attenuation</u> with respect to that of very pure water uses a variation of this method. Note that optically pure water is very difficult to obtain. The relative beam attenuation c_R of a suspension is calculated from the relative light transmission *T* over a path x of the sample vs. a pure water standard. Here *T* is defined as the ratio of the light through the sample, I_{sample}, to the light intensity reaching the receiver through a standard, $I_{standard}$ most often the purest water available,

Use or disclosure of sensitive information contained on this page is subject to the restriction on the title page of this proposal or document.

$$T \equiv I_{sample} / I_{standard} .$$

Together with the instrument path length x, the relative beam attenuation is:

$$c_R = - \ln [T] / x$$

A second method involving ratios and the one that Kaitech employs avoids some of the instability issues. This method involves multiple looks at two or more known distances of beam travel of the light scattered 90° from the beam as it progresses through the water. For a well collimated negligible divergence light beam a constant fraction of beam light will be scattered at each point in the beam into the 90° direction from the beam. Radiometric detectors positioned at known distances along the beam and directed 90° will record this scattered light. It can be simply shown that the ratio of two scattering measurements, I_1 and I_2 , made at two distances, l_1 and l_2, along the beam are sufficient to determine the beam attenuation coefficient as

$$c = (l_2 - l_1)^{-1} \ln (I_1/I_2) .$$

An advantage of this ratio method is that the method is self-calibrating with resolving power determined by the path length difference between the two detector pairs ($l_2 - l_1$). It is independent of source intensity and detector gain fluctuations. Kaitech's implementation enhances the two path length method be making three path position measurements allowing paths l_2-l_1 to be added to l_3-l_2 producing l_3-l_1 a repetitive measure and check sum of the individual path intensity measurements.

DESIGNS

Kaitech has arrived at two candidate designs with many common features including source, detectors, and path length, but with a fundamental difference in sampling technique and sample container configuration and operation. One design uses a pumped flow through sampling system, while the other, the in situ system, samples the water passing naturally by it either from lowering through the water or from currents flowing by a moored site. These two versions are discussed below. First however a common component of each system is the spectral light source subassembly. This important element is now described.

Spectral light source subsystem

The light source subsystem shown in the figure below consists of up to six diode lasers mounted in a cylinder in a manner similar to cartridges in a revolver pistol. Readily available diode laser colors in the visible bands are: 405, 473, 532, 635, 650, 658, 670, and 690 nm. For a reasonable color count, the laser mounting is arranged in a 6 about 1

Use or disclosure of sensitive information contained on this page is subject to the restriction on the title page of this proposal or document.

configuration with the central space for a stepping motor. With fixed lasers, a folding prism each, combinations of beam splitters and special coatings, and a 45º mirror on the stepper the laser beams are concentric with the sample space's central axis.

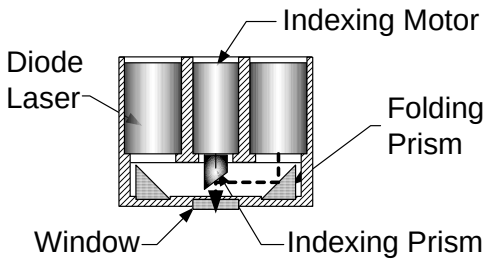

Color is selected by choosing the laser complement, indexing the 45° prism to the appropriate laser's position, and powering the selected laser.

Spectral measurements are done using the various laser colors available. No spectrometer is used. One way to interpolate spectral values between the available laser wavelengths is to use the full color spectral information available from the Kaitech absorption spectrometer measurements and interpolate to calculate a more complete range for the spectral attenuation values. We are considering this approach. This light source will be produced as a self contained module so that it can be integrated into the two following beam attenuation coefficient configurations shown below and into other WPS sensors.

Light detection subsystem with flow through configuration

As can be seen from the figure below this system pumps water through a baffled tube sample cavity, illuminates the cavity with one of the six lasers, and gathers the ratioing data through three side-looking optical fiber/photodiodes located at different path distances along the beam.

Use or disclosure of sensitive information contained on this page is subject to the restriction on the title page of this proposal or document.

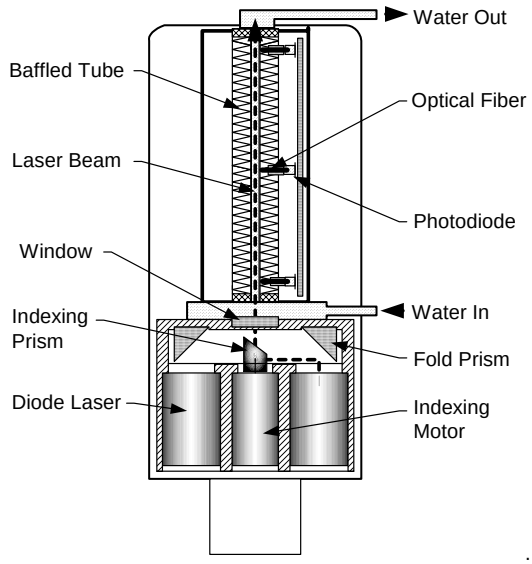

The diode lasers (up to six in current design) each operate at a different spectral color within the visible band. The photo detectors (up to three in the current design) are equally spaced along the optical path and detect the laser beam's intensity at these positions. Three photodiodes along the optical path allow measuring redundancy by adding summed attenuations between detectors 1 and 2 with those from 2 to 3 and seeing how closely the results equal the attenuation sum between detectors 1 and 3. By sequencing the laser colors the color-blind photo detectors determine the water's attenuation for each color and provide the water's spectral attenuation.

The photo detectors measure the intensity of a laser beam at two or more positional distances from the beams entry into the seawater as it passes the measurement positions. In this design

- The beam diameter is ~1 mm collimated with less than 0.1 mrad divergence
- Three fibers precisely couple the laser beams axis to the receiving photo detectors
- Path length distances are precisely known by the fibers positioning
- The op-amp photodiode detectors with feedback have very high sensitivity
- Resolving resolutions are determined by path length differential
- The ratiometric method is self-calibrating
- Anti-biofouling measures are easily included

The pumping of the sample means that this configuration is well suited for moored applications.

Direct in situ configuration

Use or disclosure of sensitive information contained on this page is subject to the restriction on the title page of this proposal or document.

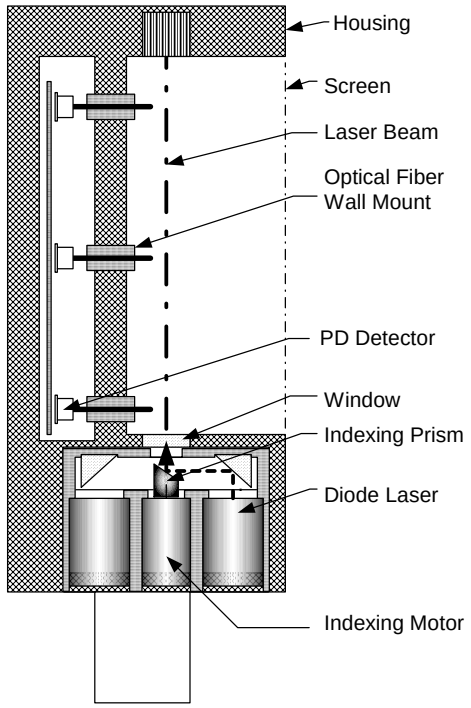

This version of the Beam Attenuation Sensor shown in the figure above does not employ a pump as the water adjacent to the instrument freely flows through the sample space. The design employs the 6 about 1 source configuration discussed above and used in the pump flow through systems. In all other ways the measurement and ratioing techniques are the same for the two systems. This in situ version would be better suited for active profiling.

In this design

- The beam diameter is less than 1 mm collimated to less than 0.1 mrad. divergence
- Three fibers precisely couple the laser beams axis to the receiving detectors
- Path length distances are precisely known by the fiber positioning
- The op-amp photodiode detectors with feedback have very high sensitivity
- Resolving resolutions for coastal and oceanic waters are determined by path length differential
- The ratiometric method is self-calibrating
- The sample volume is directly in local water – no pump
- Anti-biofouling measures are easily included

Conclusions

Use or disclosure of sensitive information contained on this page is subject to the restriction on the title page of this proposal or document.

Kaitech has developed two robust spectral beam attenuation coefficient instruments that can be adapted to either profiling or fixed measurement programs. The instruments are small, compact, adaptable, and wavelength versatile.

4.2.5 SPECTRAL FLUORESCENCE SENSOR

DESIGN

Kaitech, with Dr. Hugh MacIntyre at Dauphin Island Sea Lab (DISL), has recently completed a Laser Induced Fluorescence (LIF) project sponsored by NOAA's- UNH - Cooperative Institute for Coastal and Estuarine Environmental Technology (CICEET) to develop instrumentation for detecting toxic algae, known as Harmful Algae Bloom (HAB). With the start of this NASA Phase I work we sought to introduce a new miniature design that takes an innovative approach to concentrate the sample's laser induced emissions and achieve coincidence of the laser and detector fields-of-view (FOV). The following figure of the Spectral Fluorescence Sensor shows this conceptual design

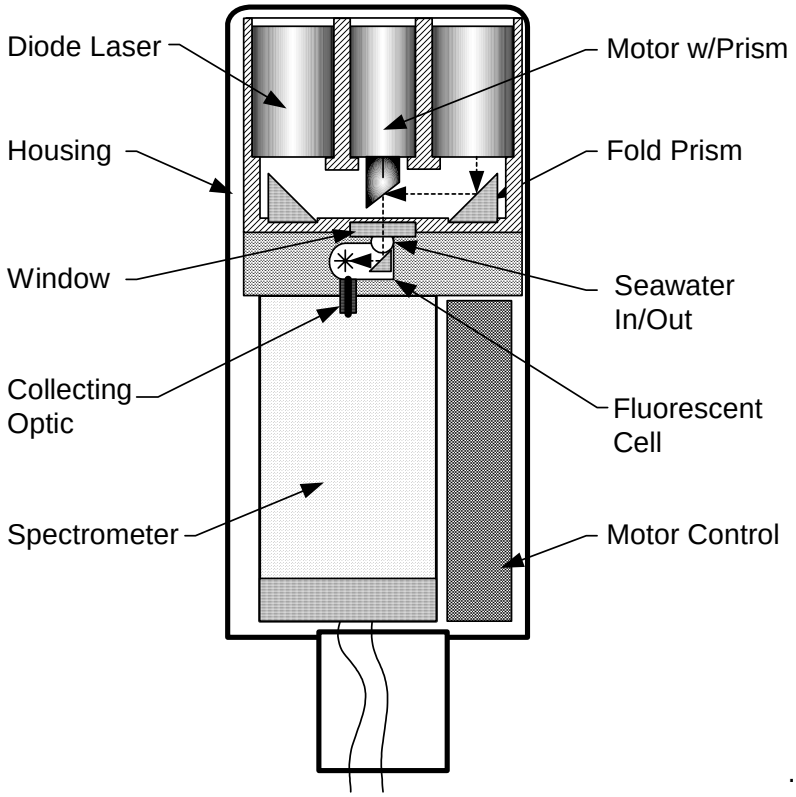

One goal of this project is to develop a miniature multi-channel Spectral Fluorescence Sensor capable of discriminating between the four main pigment types: cyanobacteria, chlorophytes (Chlorophyceae, Trebouxiophyceae, Prasinophyceae), cryptophytes and

Use or disclosure of sensitive information contained on this page is subject to the restriction on the title page of this proposal or document.

chromophytes (Bacillariophyceae, Dinophyceae, Pelagophyceae, Prymnesiophyceae and Chrysophyceae). The last group contains numerous HAB taxa.

Measuring living chlorophyll fluorescence provides an indication of the biomass of a phytoplankton population. While Chlorophyll-a measurements serve as an index of the biomass, they do not identify the species composition.

Kaitech's instrument emits the wavelengths of different colored lasers onto the phytoplankton to excite their fluorescent spectra and allow optical sensors to track their complement of pigments. The narrow spectral bandwidth of a laser is used to effectively excite a fluorophore thereby improving its signal, enhancing its contrast, and reducing cross-talk in a fluorophore-multiplexing assays. For example, the characteristic spectrum of photosynthetic microalgae cyanophyceae, bacillariophyceae, or chlorophyceae can be exploited to reveal their taxonomic structure at a coarse level. The underlying principle depends on stimulating taxon-specific photosynthetic accessory pigments and observing fluorescence by the ubiquitous pigment chlorophyll *a* (Chla). By targeting pigments at different wavelengths, it is possible to define characteristic spectral fluorescence signatures for different taxa. The signatures of an unknown sample can then be compared to a library of known signatures to determine its taxonomic constituents. An example is shown in the figure below.
.

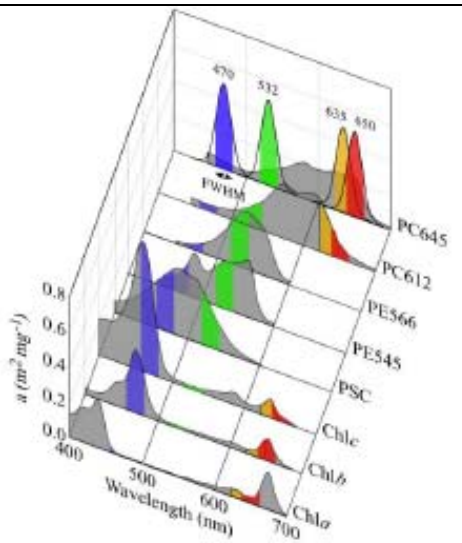

Specific absorption spectra of
- Chlorophylls (Chl*a*, *b* and *c*),
- Photosynthetic carotenoids (PSC),
- Phyco-erythrins (PE)
- Phycocyanins (PC).

The emission bands at full-width half maximum (FWHM) for lasers with peak emission at 470, 532, 635 and 650 are overlain for comparison.

Modified from MacIntyre et al.

A second operational consideration for Kaitech's sensor is the fact that fluorescent measurements are typically performed in waters in which there are optically active materials other than microalgae. These include colored materials, notably chromophoric dissolved organic material (CDOM), with well-characterized absorption spectra, and scattering particles. Both can distort the microalgae signatures by causing spectrally-dependent reductions or reinforcements of the fluorescence signals, respectively. Their

Use or disclosure of sensitive information contained on this page is subject to the restriction on the title page of this proposal or document.

abundance is variable and independent of microalgal biomass so they constitute a complex source of error for the approach.

The instrument that we have developed and tested in this Phase I project is designed to address these problems. It uses up to six lasers to excite chlorophyll a fluorescence including the CICEET lasers at 532, 635 and 650 nm. The first preferentially excites photosynthetic carotenoids and phycoerythrins; the second preferentially excites phycocyanins *c* chlorophylls; and the third preferentially excites chlorophyll *b*. Other lasers include 405 and 473 nm to excite CDOMs and particulates and quantify any errors introduced by variability in CDOM and particle load.

Detection in this instrument is fully spectral so the instrument is capable of detecting fluorescence from both phycobilins and chlorophylls. In consequence, it is able to distinguish between phycoerythrin- and phycocyanin-rich cyanobacteria, and between eukaryotes with chlorophyll *c* and photosynthetic carotenoids (chromonphytes) vs. those with chlorophyll *b* and without photosynthetic carotenoids (chlorophytes). In doing so, it has higher discriminatory power than commercial instruments, which measure only single wavelength detections.

This design achieves concentration by focusing the lasers' output into a very small sample space where the excitation energy is allowed to scatter and reflect many times from the cells walls re-entering the sample and enhancing the sample's fluorescent emissions. At the same time the spectrometers optical fiber is positioned so that its optical FOV can effectively collect the sample's raw and reflected fluorescent emissions. The designs features are:

- The seawater flow path is positioned to avoid bubbles
- Integrated spectrometer and motor control design is plug and play
- Large optical fibers enhance the fluorescence signals detection
- Sample cell access reduces maintenance
- Wetted materials provide antifouling capabilities
- Laser selection permits CDOM and bacteria quantification
- Design is immune to ambient solar illuminations

MULTI LASER BEAM LIGHT SOURCE

Because of their high brightness, stability, longevity, and narrow spectral bandwidth, lasers have been advantageously replacing conventional broadband light sources for fluorescence imaging applications. In addition to allowing higher-sensitivity visualization and enhanced throughput in imaging applications, several unique properties of lasers—narrow beam divergence, high degree of spatial and temporal coherence, and well-defined polarization properties—have spawned new fluorescence imaging techniques.

Use or disclosure of sensitive information contained on this page is subject to the restriction on the title page of this proposal or document.

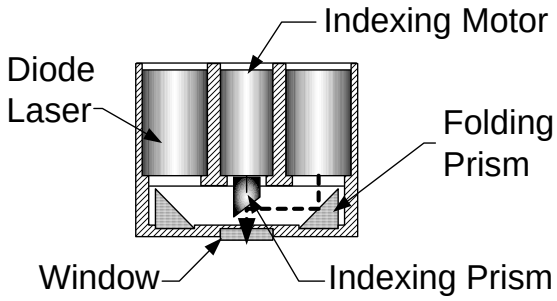

Kaitech's multi laser beam light source is a miniature opto-mechanical assembly that mounts lasers about a central axis and points the laser beam(s) to reflect from a 45° indexing prism and exit the light source module concentrically with the central axis. The assembly can hold up to six diode lasers. The candidate wavelengths for spectral fluorescence are: 405, 473, 532, 635, 650, and 660 nm. Color is selected by choosing the laser complement, indexing the 45° prism to the appropriate laser's position, and powering the selected laser. This light source will be produced as a self contained module so that it can be integrated into two different WPS sensors.

EARLY WORK

This early sensor design shown in the figure below uses three or more laser wavelengths or colors in a Laser Induced Fluorescence (LIF) arrangement to stimulate particles suspended in seawater to selectively determine the abundance and taxidermy of phytoplankton and dissolved matter by their fluorescence. The lasers sample the seawater individually, but if required can be combined to provide simultaneous multiple-color detections. An individual laser's narrow spectral bandwidth effectively excites a specific fluorophore, thereby improving signal, enhancing contrast, and reducing crosstalk in multiplexing assays allowing spectral visualization of samples with tens of nanometers of resolution. These imaging techniques accurately profile individual (or groups) of molecules, while increasing dramatically the number of photons acquired from the given fluorophore

Use or disclosure of sensitive information contained on this page is subject to the restriction on the title page of this proposal or document.

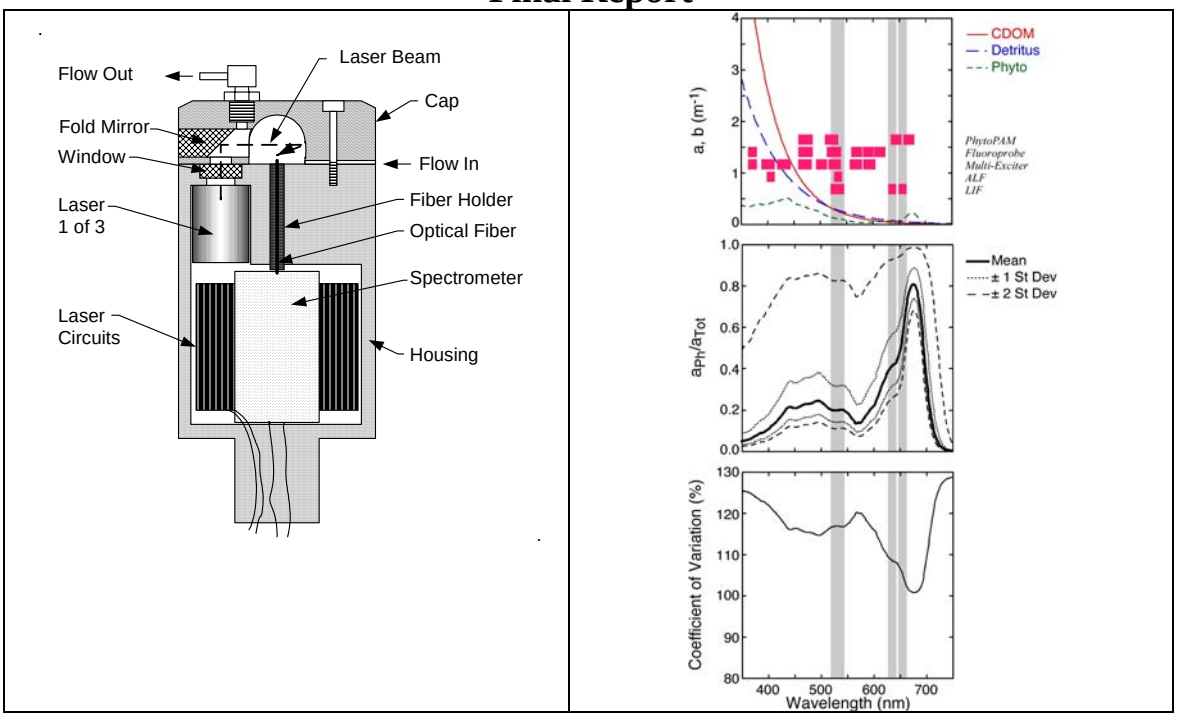

Fluorescence Detection of Algae, CDOM, Other Material in Seawater

Spectral Fluorescence Sensor's Optical Configuration

This sensor's design uses solid-state semiconductor diode lasers and frequency-doubled diode-pumped solid-state (DPSS) lasers because of their brightness, stability, longevity, narrow spectral bandwidth, narrow beam divergence, high degree of spatial and temporal coherence, small size, low cost, and efficiency. In addition they allow higher-sensitivity visualization and enhanced throughput in imaging applications. However, the advent of lasers as fluorescence light sources imposes new constraints on imaging systems and their components. Optical filters, when used in laser-based imaging systems, must meet specific unique requirements compared to filters used in instruments employing broadband-light sources. The arrangement of optical components is depicted in the figure below. Note Emission filters are located with the spectrometer.

Use or disclosure of sensitive information contained on this page is subject to the restriction on the title page of this proposal or document.

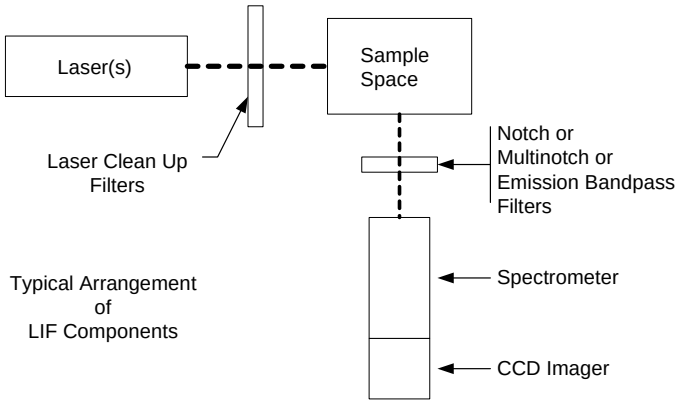

The absorption and emission spectra of fluorophores typically overlap (see previous Figure.). Because the fluorescent photons are precious, it is desirable that the separation of the excitation and emission signatures be as small as possible to enable maximum capture of even weak signals close to the excitation light. Achieving tight separation requires exceptional steepness of the filter edge between blocking and transmission regions. The edge steepness of a filter is defined as the wavelength separation between a point of high blocking and a high transmission point. With advances in the design and manufacturing techniques for hard-coated filters, edge steepness values as small as 0.2% of the laser wavelengths are readily available. Such a filter designed to block a 532 nm laser is guaranteed to achieve high transmission within 1 nm of the laser line. Therefore, matching of excitation and emission filters for best performance provides a means of achieving high-fidelity imaging.

Optical source clean-up filters (excitation filters) are important for blocking unwanted laser light at wavelengths away from the actual laser line. Typically these filters provide deep optical density (OD) 6 blocking of the unwanted light, while allowing exceptional transmission at the laser lines.

Excitation filters for laser applications also have unique wavelength requirements. Diode-pumped solid-state (DPSS) lasers, have very precise and narrow laser lines. However, the spectral output from diode and optically pumped semiconductor lasers can vary from laser to laser, with temperature, and laser age. Therefore, broader excitation filters are a good solution.

A typical emission filter should provide more than OD 6 blocking at the laser line while providing excellent transmission of the emission signal. Dichroic substrates should have ultralow autofluorescence and antireflection coatings to maximize transmission of the emission signal and eliminate coherent interference artifacts.

Use or disclosure of sensitive information contained on this page is subject to the restriction on the title page of this proposal or document.

Hard-coated thin-film ion-beam sputtered filters that have high optical durability, robust environmental reliability, and are impervious thermal and humidity degradations are preferred.

Extant hardware developed for this phase 1 work is shown below.

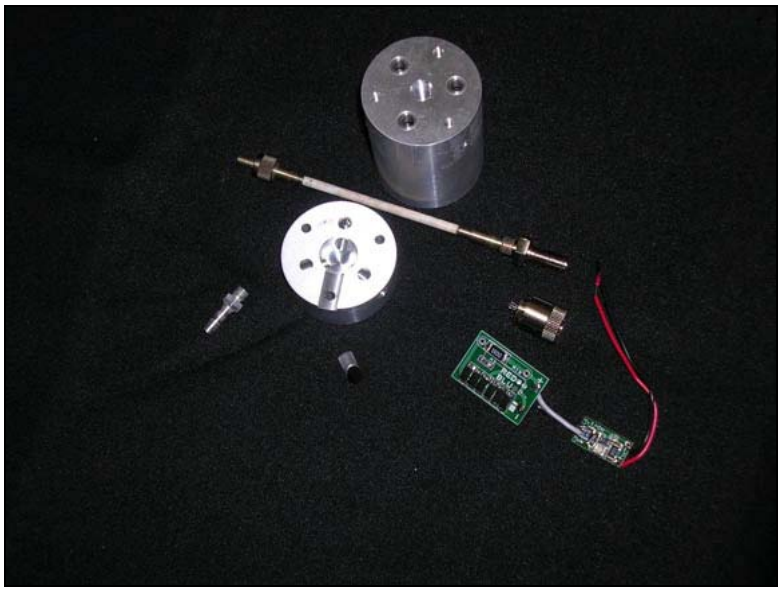

4.2.6 PHYSICAL PROPERTY SENSOR SELECTIONS

During the past six months, Kaitech has reviewing the designs of potential commercial physical property sensor suppliers, and we find that Aanderaa Data Instruments, Inc. is the cost leader for 5 of the 6 Physical Property Sensors sought for the WPS system. All of their sensors are in service in their Seaguard product line, an underwater observatory and real-time Met/Ocean observations system. The sensors feature plug and play technology, low fouling sensitivity, and data of high quality. Aanderaa is a unit of ITT Corporation (NYSE: ITT) White Plains, NY 10604

Conductivity, Temperature, & Depth Probe	**Aanderaa**	**SeaBird**	**Teledyne RDI**	
Model #	4319	SBE-19 CTD	CTD-NV	
Size	36x39x86 mm			
Dynamic Range	0-7.5 S/m	0-9 S/m	0-9 S/m	
Resolution	0.0002 S/m	0.00007 S/m	0.0002 S/m	
Stability	5%	0.0003/ mo	0.0005 uS/cm/mo	
Sample Rate	3 s		8 Hz	
Data Interface	RS 232	RS 232	RS 232	
Voltage	6-14 VDC	9-28 VDC	8-35 VDC	

Use or disclosure of sensitive information contained on this page is subject to the restriction on the title page of this proposal or document.

Current Draw	0.16-100 mA	20µ-170 mA	40 mA	
Thermal Range	-5/40 C	-5/35 C		
Depth	300/ 2 km/ 6 km	600-7 km	500-7 km	
Biofouling				
Calibration	inductive	4 point current	inductive	
Cost	$3,211	$11,875+pump$550	$7,050	

Dissolved O^2 Optode	**Aanderaa**	**Seabird**		
Model #	4330F	SBE-43		
Size	36x86 mm	66x295 mm		
Dynamic Range	0-500 µ mol/l	120 % surface		
Resolution	0.1 µ mol	0.2 %		
Stability	5 %	0.2 %/1000 hr		
Sample Rate	2 s			
Data Interface	RS 232			
Voltage	5-14 VDC	6.5-24 VDC		
Current Draw	0.16-100 mA	60 mW		
Thermal Range	-5/40 C			
Depth	300/ 2 km/ 6 km	7000 m		
Biofouling	Sapphire			
Calibration	1 yr	Clark		
Cost	$3,175	$4,995		

Pressure Probe	**Aanderaa**	**Honeywell**	**Paroscientific**	**Seabird**
Model #	4117	AB HP	8DP	SBE-29
Size	36x86 mm	19x29.2 mm		4.8x12 cm
Dynamic Range	0-1kPa / 4kPa		10-140 m	0-7000 m
Resolution	0.04 %	1% FS	0.0001 %	0.002 %
Stability		1% FS	0.01 %	0.004 %
Sample Rate	1 s			
Data Interface	RS 232		RS 232	
Voltage	6-14 VDC	5 VDC	6-25 VDC	+10/-10 VDC
Current Draw	0.25-50 mA	2 mV/V	1.3 mA	15 mA
Thermal Range	-5/40 C	-54/71 C	-2/40 C	
Depth	0-6 km	200 m	0-700 m	
Biofouling			coating	
Calibration				
Cost	$2,462	$529 +housing	$6075	In CTD $

Use or disclosure of sensitive information contained on this page is subject to the restriction on the title page of this proposal or document.

Temperature Probe	**Aanderaa**	**GE Thermo**		
Model #	4060			
Size	36x76 mm			
Dynamic Range	-4/36 C			
Resolution	0.001 C			
Stability	0.03 %			
Sample Rate	1 s			
Data Interface	RS 232			
Voltage	6-14 VDC			
Current Draw	.0.25-50 mA			
Thermal Range	-5/40 C			
Depth	300/2 km/6 km			
Biofouling				
Calibration				
Cost	$2,230			

pH Probe	**Aanderaa**	**Hach**	**Microsense**	**Seabird**
Model #			MSFET3310	SBE-18
Size			50x4x1mm	4.9x13.5 cm
Dynamic Range		0-14 pH	1-12 pH	0-14 pH
Resolution		0.01 pH	50 mV/pH	0.1 pH
Stability		0.2	0.1 pH/day	
Sample Rate			1 s	1 s
Data Interface		RS 232		
Voltage		12 VDC		6-24 VDC
Current Draw				7 mA
Thermal Range		-5/50 C	-40/120 C	
Depth		200 m		1200 m
Biofouling		Glass		
Calibration				
Cost				$2,040

Turbidity Probe	**Aanderaa**	**SeaPoint**	. **WetLab**	
Model #	4112			
Size			6.3x12.7 cm	
Dynamic Range	0-750FTU 800nm	0-750FTU 800nm	0-1000NTU 700nm	

Use or disclosure of sensitive information contained on this page is subject to the restriction on the title page of this proposal or document.

Resolution	0-5.0 VDC	0-5.0 VDC	0.12 NTU	
Stability	1 mV	1 mV		
Sample Rate	0.1 s	0.1 s	8 Hz	
Data Interface	RS 232	RS 232	RS 232	
Voltage	7-20 VDC	7-20 VDC	7-15 VDC	
Current Draw	3.5-6 mA	3.5-6 mA	150µ-60 mA	
Thermal Range	0/65 C	0/65 C	0/30 C	
Depth	300 m	300 m	600 m	
Biofouling	ABS Plastic	ABS Plastic	Wiper 140 mA	
Calibration				
Cost	$2,291	$2,291	$3,250	

4.2.7 SYSTEM ADAPTORS

The Water Properties Sensor (WPS) system is a single man-portable, field deployable sensor system for simultaneously measuring the spectral optical properties & physical properties of ocean or fresh water. The individual sensor modules are plug and play to a central data management unit for timing, control, and archival of the data. Many configurations of the WPS system are possible. The following figure depicts the basic adaptor components being the adaptor housing, the seals, and the top and bottom plates, Sensors can be side mounted to the adaptor housing or to mounting ports in the top or bottom plates

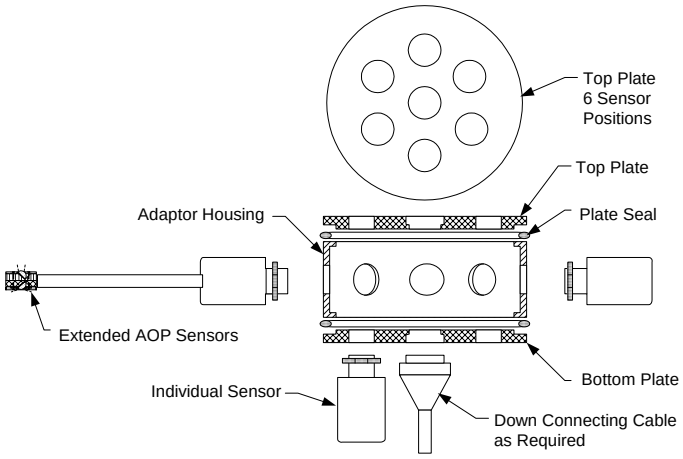

Typical Hardware for an Adaptor Include Its Housing, Seals and Plates
Sensors Side Mount to the Housing and Face Mount to the Plates

Following are two illustrations of how adaptors would be used. The first shows adaptors top and bottom to a cylindrical pressure vessel housing such as an ocean observatory.

The individual sensor modules are plug and play to a central data management unit for timing, control, and archival of the data. Many configurations of the WPS system are possible. Next we have depicted a moored configuration as likely the most demanding followed by a small boat/

Use or disclosure of sensitive information contained on this page is subject to the restriction on the title page of this proposal or document.

string configuration as the least complex. Inside the functions are similar but operational requirements can increase the systems complexity.

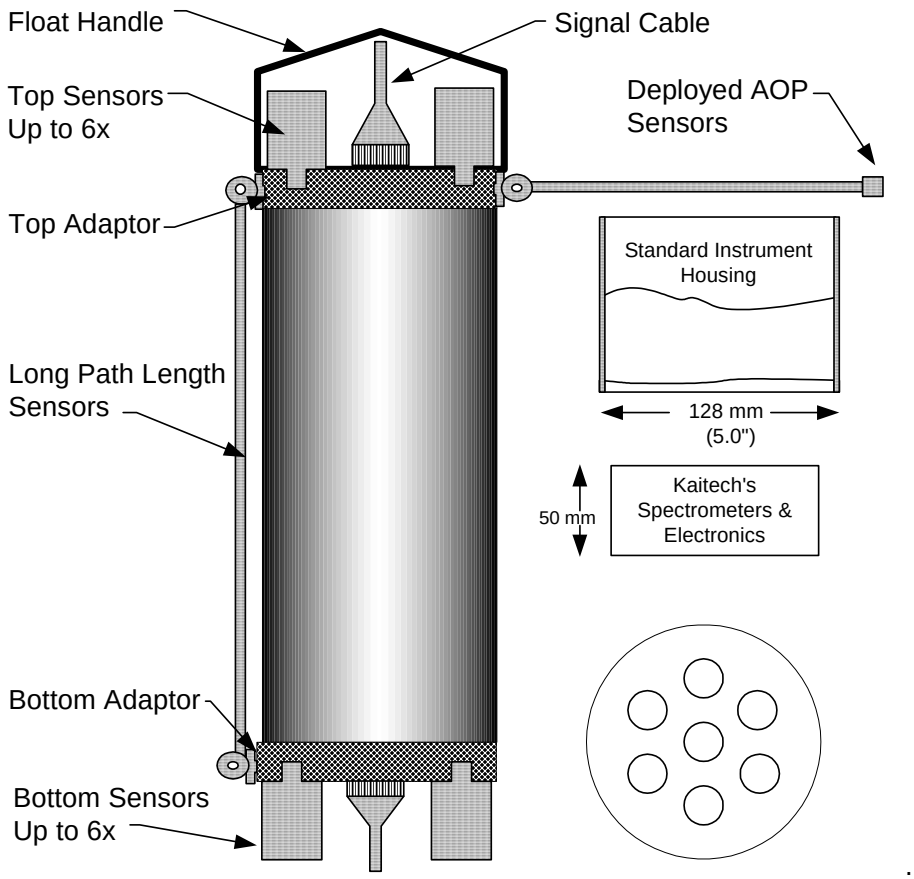

• Up & Down Spectral Irradiance • Up & Down Spectral Radiance • Spectral Absorption • Spectral Attenuation • Beam Attenuation • Spectral Fluorescence	• Conductivity • Temperature • Pressure/Depth • Dissolved Oxygen • Turbidity • pH

The WPS Systems Optical and Physical Sensors

SMALL BOAT OR STRING ADAPTOR

For small boat or string mountings the WPS system will have a cable adaptor. The cable adaptor will contain plug and play mounting positions for sensors, spectrometers, and pumps. The adaptor will house a microprocessor for sensor operation, data collection and logging or to convert spectral data to electrical signal for transmission. Mounting positions can be top, bottom, or radial

Use or disclosure of sensitive information contained on this page is subject to the restriction on the title page of this proposal or document.

from the adaptor's housing. Note that cable lengths will determine the separation distances between adaptors in a string.

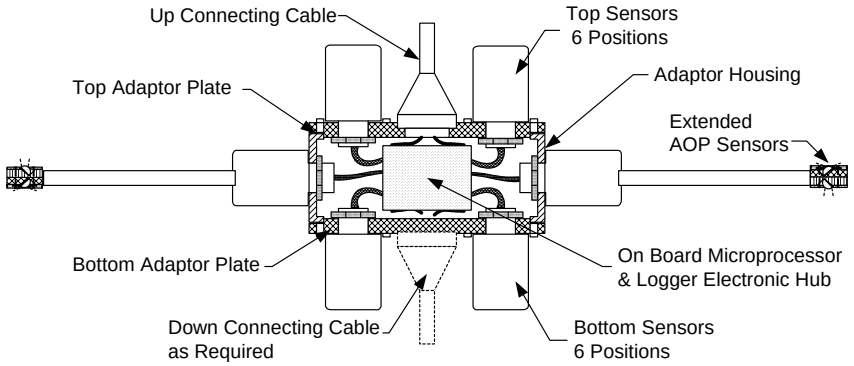

4.2.8 ACCESSORIES

4.2.8.1 MINIATURE SPECTROMETER(S)

The availability of the Mutoh MSE Spectrometer, at 14x14x 28 mm size, has allowed the inte The Water Properties Sensor (WPS) system is a single man-portable, field deployable sensor system for simultaneously measuring the spectral optical properties & physical properties of ocean or fresh water. The individual sensor modules are plug and play to a central data management unit for timing, control, and archival of the data. Many configurations of the WPS system are possible.

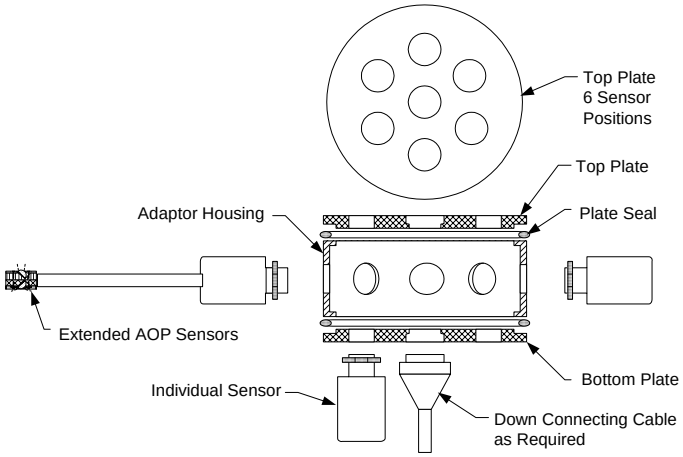

Typical Hardware for an Adaptor Include Its Housing, Seals and Plates
Sensors Side Mount to the Housing and Face Mount to the Plates

Following are two illustrations of how adaptors would be used. The first shows adaptors top and bottom to a cylindrical pressure vessel housing such as an ocean observatory.gration of the spectrometers with the sensing elements and within their individual sensor pressure housings. This ability has greatly reduced the systems spectrometer and the optical fiber packaging requirements.

Use or disclosure of sensitive information contained on this page is subject to the restriction on the title page of this proposal or document.

Our investigations of miniature sized spectrometer designs typically found, that commercial products available had spectral resolution typically greater than the 10 nm exceeding the NASA/TM-2003 Protocol requirement. Only one candidate, Mutoh America, preserved spectral resolution but with a limited spectral range. Mutoh America, is a subsidiary of Mutoh Industries Ltd, a leading manufacturer of plotters**,** and inkjet printers that has developed a line of spectrometer products for its internal consumption and is just now exploring the commercial market potential for these products.

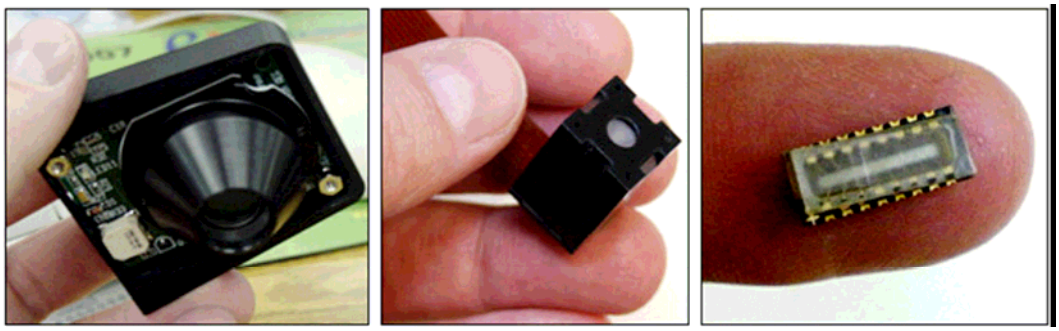

To evaluate their product, Mutoh loaned Kaitech, a Model MSI-400 (shown in the left photo) production spectrometer. It is larger then the MSE design (shown in center photo) but has the same focal plane (right photo) and collecting optics. We found that the MSI-400 sampled a 390 - 710 nm spectral range with a better than 3 nm spectra resolution. In general, the MSI-400 worked well with exception of access to the devices control functions using the provided software. For future developments, Mutoh America has stated their willingness to customize the operating software to Kaitech's requirements and provide their MSE (center photo) Spectrometer.

Mutoh's MSE spectrometer is a compact spectrophotometer module (14mm Square x 28 mm Long) that is rugged, low-cost, and easy to integrate with a wide range of Kaitech's WPS devices. It incorporates an 80MHz 16-bit CPU for processing spectral data and features a 390 - 710 nm spectral range with < 3 nm spectra resolution.

4.2.8.2 MINIATURE PUMP

Early in this Phase I Project Kaitech selected a wobble plate pump design as a good choice (we use them in our lab). Subsequently, the manufacturer couldn't specify a long operational life. Kaitech therefore continued its search for a miniature and low cost pump. We examined DC type solenoid piston pumps and AC powered spring piston pumps with cost and/or reliability concerns (see alternate pump designs subsection). We followed this with a web search for micro/nano-pumps and that search stimulated a fresh approach and culminated in Kaitech conceptualizing a innovative and miniature Hollow Shaft Pump (HSP). This design is presented next.

Hollow Shaft Pump

From biology and medicine to space exploration small fluid volumes are often pumped, controlled or otherwise manipulated. Small fluid volumes, on the order of a milliliter or a volume contained in a 1 cm sized cube, figure prominently in an increasing number of engineering systems. Microfluidic requirements for biology and medicine can sometimes be met by passive mechanisms. Other applications use macroscale pumps and valves to provide fluidic transport.

Use or disclosure of sensitive information contained on this page is subject to the restriction on the title page of this proposal or document.

Yet for many microfluidic systems, miniature, self-contained, active pump, sized to the volume of fluid to be pumped, are necessary or highly desirable. In this subsection we consider the parameters relevant to a submersible instrument that is transporting milliliters/sec of an ambient fluid through orifices and/or tubes at moderate pressure differentials, to gain insight into synthesizing a WPS system miniature pump.

Kaitech's Hollow Shaft Pump (HSP) is a simple, rugged, compact, self-pumping, and low cost pump design for the WPS system. It consists of a machined shaft with attached motor that is sealed for the submarine environment. It is constructed by, machining a cylindrical hole in the shafts center and connecting it with radial slots orthogonal to the shafts diameter. Thus, the machined hole and slots form passages between the shafts hollow interior and its outer surface. Its operating principal is that ambient seawater within the shaft is centrifugally spun out of the radial slots and that the exiting fluid is replaced causing the fluid to flow. The fluid flow can be continuous for profiling or pulsed for a mooring. By design this pump uses differential pressure to transport the fluid and dumps it back into the ambient environment.

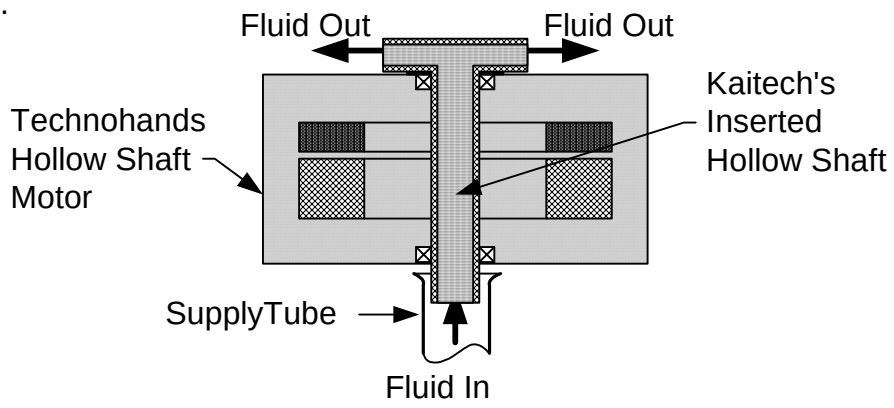

Hollow Shaft Pump (HSP) Assembly.

Using miniature DC motors, we envision the HSP to have exterior dimensions of less then 2" diameter by 1" thickness for the motor, plus extensions each side of ¼" for the pump. For example, the figure provides a cross-section of the design, depicting an off-the-shelf Technohands 8.5 mm hollow shaft motor, *with an inserted hollow shaft pump passing through the motor*, to allow miniaturization of the assembly. With these dimensions the pump can be integrated directly into the individual sensors enhancing the sensors plug and play capabilities. For mountings separated from the sensor, a tube connecting the water reservoir to the inlet in the pump housing as shown in the figure, is required. With this construction, when the shaft spins, centrifugal and viscous forces from the spinning shaft will force a fluid to flow through the shaft inlet, through the interior of the shaft, and out through the slot ports. The hollow interior of the rotating HSP will transfer momentum to the contained fluid through the fluids viscous and centrifugal forces and pumping is controlled by the fluid's acceleration as governed by the shaft's flow paths dimensions and its speed of the rotation. Kaitech estimates that this open design at moderate speeds would achieve a flow rate of greater than 25ml/sec at differential pressures less than 3 psi.

Use or disclosure of sensitive information contained on this page is subject to the restriction on the title page of this proposal or document.

ALTERNATE PUMP DESIGNS

Solenoid Pump

A typical solenoid pump is designed to provide a precise, repeatable volume of fluid through a flow path that isolates the fluid from the operating mechanism using a flexible diaphragm. When the solenoid is energized the diaphragm is pulled back creating a partial vacuum within the pump body. This pulls liquid through the inlet check valve (A) and simultaneously closes the outlet check valve (B). When the solenoid is de-energized
a spring pushes the diaphragm down expelling a discrete volume of liquid through check valve B while simultaneously closing check valve A.

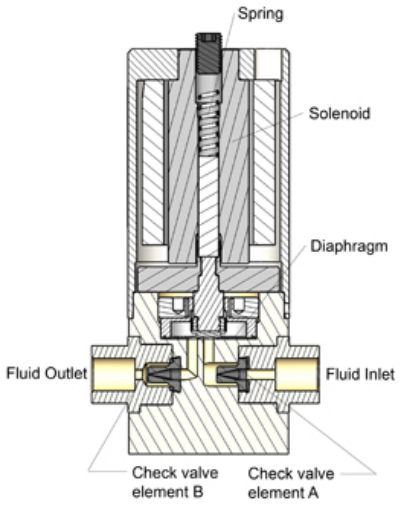

Solenoid pumps dispense volumes range from 4µl to 250µl per cycle, are self-priming at start-up and once primed, generate around 5psi (0.3bar) water pressure, and requires a complete on-off cycle for each dispense cycle. They typically are designed for continuous duty suitable for up to 20 million actuations or nearly 3,000 hours of continuous use. Repeatedly cycling the solenoid creates a pulsed flow

Suppliers

Bio-Chem Fluidics
85 Fulton Street, Boonton, New Jersey 07005 USA
Tel: 973-263-3001, Fax: 973-263-2880,

The Lee Company
2 Pettipaug Rd, Westbrook, CT 06498-0424
Tel: 860-399-6281, 800-LEE-PLUG

4.2.8.3 WPS SOFTWARE

Software to be developed for the Water Properties Sensor (WPS) system will focus on the integration of Kaitech's Optical Property Sensors to the CANbus network. Each optical sensor will be a node (slave) on the network and it will need to contain a memory chip (containing a unique sensor abstraction) to work on the network. The abstraction will contain the nodes address and its recognitions to initialize, with other communication exchanges such as send, sleep, etc. In

Use or disclosure of sensitive information contained on this page is subject to the restriction on the title page of this proposal or document.

addition, the memory chip will contain code for the sensors signal formatting, scaling, and the sensors calibration coefficients. We intend to develop the individual sensors code in C++.

For integration with the Seaguard's network Aanderaa Data Instruments Inc. has agreed support the program by making available to Kaitech, at no cost, typical sensor hardware and to provide access to their AiCaP Network's technology to develop the proposed sensors.

Hardware will be electronic cards with full AiCaP implementation + a TMS320F28335 DSP with interface cables. Software will include the AiCaP Sensor Software Framework source code and interface documentation for data output. Kaitech will use Boston Engineering Corporation, an experienced C++ and Networking company, to develop the sensors software.

4.3 Meeting The Technical Objectives
The technical objectives of this Phase I project were to design a comprehensive and miniaturized Water Properties Sensor (WPS) system. These technical objectives were met by the design material provided in Subsection 4.2 of this Final Report.

4.4 Task Labor Categories and Schedules
The Labor Categories and Schedules were completed in accordance with the contracts requirements.

PART 5 POTENTIAL APPLICATIONS

5.1 Potential NASA Applications
Kaitech's business plan for this project concluded that NASA would be a first application for the WPS System. Typical applications would be for monitoring and reporting the spectral and physical water properties to ground truth satellite remote sensing systems. In addition, Our Water Properties Sensor (WPS) designs are configured to support NASA's Ocean Biology and Biogeochemistry and Applied Sciences programs, the Integrated Ocean Observing System (IOOS), field studies of fundamental marine processes, regional coastal research, and the gathering of in situ water measurements of the environmental conditions fundamental to the measurement, calibration, and validation of NASA's satellite programs.

5.2 Potential Non-NASA Commercial Applications
Kaitech's three-year business plan assessment suggests that there are a number of potential Non-NASA applications for the WPS system within the scientific and commercial communities. Our projections are that federal agencies (such as NOAA with its National Estuarine Research Reserves and EPA) state governments, environmental laboratories and oceanographic research scientists will be the first commercial users and sales are expected to be direct to the user via the Internet, word-of-mouth contacts, technical publications in professional journals, and direct contact. Our projections indicate that a significant market exists for monitoring ports, harbors, and the littorals. To meet these applications affordability will be a significant factor in sensor systems placements.

To meet these potential Non-NASA applications our WPS commercialization strategy is in three parts. First, be successful in the Phase I contract. Second, successfully exit the Phase 2 contract with affordable costs to allow the deployment of pre-production WPS instruments with recognized oceanographic researchers that will use and recommend the instrument to the

Use or disclosure of sensitive information contained on this page is subject to the restriction on the title page of this proposal or document.

oceanographic community. Third, when awarded this program, we will address several options for teaming/licensing preferably with known marine instrument suppliers to best support future requirements. We chose this strategic plan because the oceanographic instrument marketplace is word-of-mouth, user recommendations help to encourage sales, and reputable companies have repeating customers to successfully commercialize this product.

PART 6 CONTACTS

6.1 Key Contractor Participants

Richard Cox, Principal Investigator and President of Kaitech, Inc.
Tel: 781-837-8465, Email: tooque@earthlink.net
Mr. Cox is the primary contact with NASA, to manage the overall project activities and to ensure that the work proceeds according to contract agreements. He leads the projects design efforts to synthesize the WPS's design.

DR. Gary D. Gilbert, Oceanography Technical Expert
Tel:619-225-0102, Email: ggilbert@nethere.com
Dr. Gilbert is a recognized Oceanographer recently retired from SPAWARSYSCEN-SD with over 43 years experience in the development of marine analysis and instruments. Dr. Gilbert is a consultant to Kaitech for determining the systems technical and operational requirements.

Dr. Hugh L. MacIntyre, Microalgae Technical Expert
Tel: 251-861-7535, Email: hugh.macintyre@dal.ca
Dr.MacIntyre is a recognized authority on bio-optics and in-water optical monitoring of microalgae. Dr. MacIntyre provides consultation to Kaitech for determining the systems technical and operational requirements.

6.2 Key NASA Participants

Callie Hall, Technical Monitor/COTR Stennis,
Tel: 228-688-2360, Email: Callie.m.hall@nasa.gov

Rosa Fletcher, Contracting Officer, NASA Shared Services Center (NSSC)
Tel: 228-813-6590, Email: Rosa.l.fletcher@nasa.gov

6.3 NASA and Non-NASA Advisors

Christopher Brown, Engineering Manager, Mutoh America Inc.
Tel: 480-968-7772, Email: cbrown@mutoh.com
Mutoh is a potential supplier of spectrometers for the optical sensors

Richard Butler, Vice President, Aanderaa Data Instruments, Inc.
Tel: 508-226-9300, Email: Richard.Butler@aadi.no
Aanderaa was selected best value supplier of physical property sensors

PART 7 TECHNICAL ACTIVITIES

7.1 Recent Technical Activities

Recent technical activities include:

Use or disclosure of sensitive information contained on this page is subject to the restriction on the title page of this proposal or document.

- Completed the design work for this NASA 2009 SBIR Phase I project.
- Submitted this projects Final Report
- Submitted this projects New Technology Report
- Assisted Kaitech to independently submit the Phase II proposal

7.2 Future Technical Activities
Future technical activities relative to this project hopefully will be to successfully negotiate a Phase II Water Properties Sensor (WPS) system development contract.

PART 8 POTENTIAL CUSTOMER AND COMMERCIALIZATION ACTIVITIES

8.1 Recent NASA Potential Customer Activities
NASA potential customer contacts during this Phase I project are:

Dr. Paula Bontempi, Ocean Biology and Biogeochemistry Program,
Earth Science Division, Science Mission Directorate,
Tel: 202-358-1508, Email: paula.bontempi@nasa.gov.
Requested by email, mission support for the project – unavailable

Dr Stanford Hooker, NASA Calibration and Validation Office,
Goddard Space Flight Center Greenbelt, Maryland 2077
Tel: 203-358-1508, Email:
Requested by email, mission support for the project – unavailable

8.2 Recent Non-NASA Potential Customer Activities
Non-NASA potential customer contacts during this Phase I project are:

Dr. Dwight Trueblood, NERRS Science Collaborative Program
Tel: (603) 862-3580, Email: Dwight.Trueblood@noaa.gov
Requested by email, mission support for the project – provided names

8.3 Other Recent Commercialization Activities
None

8.4 Future Potential Customer and Commercialization Activities
With Kaitech's selection for a Phase II award to develop the Water Properties Sensor (WPS) system, we will contact many suppliers and individuals providing opportunity to meet with future potential customers and to broaden our commercialization activities.

PART 9 RESOURCES STATUS
The total cumulative costs incurred, as of 07/29/2010, is $99,957.00 dollars. As of this report date, an estimated 100 % percentage of the work has been completed.

PART 10 REFERENCES
1. Measurements of Spectral Irradiance Underwater, Tyler, Smith (1970), Gordon & Breach

Use or disclosure of sensitive information contained on this page is subject to the restriction on the title page of this proposal or document.

2. An underwater spectral irradiance collector, Smith R. C., 1969, *J. Mar. Res*, **27**
3. Integrating cavity absorption meter, Fry, Kattawar, Pope, Applied Optics, Vol. 31
4. Design and analysis of a flow-through integrating cavity absorption meter, Kattawar & Fry, Appl Opt. 2006 Dec 10; 45 (35):8990-8
5. Modeling the performance of an integrating-cavity absorption meter: theory and calculations for a spherical cavity, Kirk, Applied Optics (1995) Vol 34, No 21
6. Light & Photosynthesis in Aquatic Ecosystems, Kirk, 1994 Cambridge University Press

Use or disclosure of sensitive information contained on this page is subject to the restriction on the title page of this proposal or document.